THE IDEAL

INSTALLATION & SERVICING MANUAL

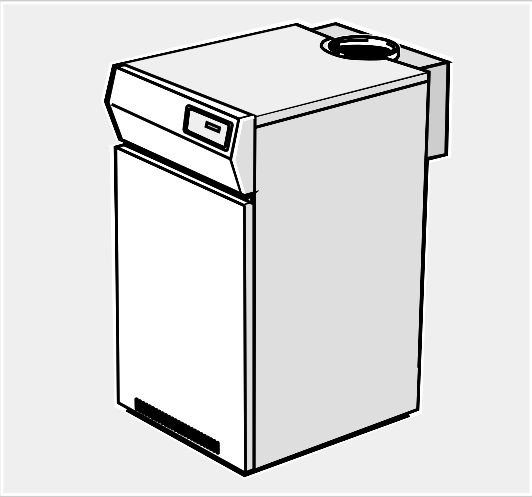

Concord

CXD 40 - 100

Installers guide to commercial central heating boilers

spares & parts online
IBASIS.co.uk©

Ideal BOILERS

CAUTION. To avoid the possibility of injury during the installation, servicing or cleaning of this appliance, care should be taken when handling edges of sheet steel components.

CONTENTS

Air Supply. 9

Boiler Assembly - exploded view. 10

Boiler Clearances. 6

Burner Assemblies - exploded views. .....
CXD 40-60. 27
CXD 70-100 28

Casing Assembly. 13

Chimney System. 9

Commissioning. 18

Controls. 5

Electrical Connections. 15

Electrical Supply. 9

Fault Finding. 33

Gas Safety Regulations 3

Gas Supply. 9

Hydraulic Resistance. 6

Initial Lighting. 18

Installation. 10

Mandatory Requirements. 8

Option Kits. 5

Pump. 7

Servicing. 25

Short List of Parts. 36

Site Assembled Boilers. 31

Static Head Requirements. 7

System Connections. 12

Ventilation. 9

Water Circulation. 5

Water Connections. 5

Water Treatment. 7

Wiring Diagrams. 16

INTRODUCTION

CONSTRUCTION

BOILER BODY

The sectional boiler body is of cast iron and is supplied assembled on a sheet steel combustion chamber with an integral draught diverter. The boiler can be supplied in sectioned form to special order for site assembly - refer to the section headed 'Instructions for Site Assembled Boilers'.

CASING

The casing is manufactured in stove enamelled sheet steel and is easily assembled on site.

BURNERS

The 3 burners are of stainless steel construction.

Gas Safety (Installation and Use) Regulations, 1994, amendments 1996 or rules in force.

It is the law that **all** gas appliances are installed and serviced by a CORGI registered installer (identified by ❀) in accordance with the above regulations. Failure to install appliances correctly could lead to prosecution. It is in your own interest, and that of safety, to ensure that the law is complied with.

The **Concord CXD 40/100** range of boilers has been tested and certified by British Gas to prEN656 for use with ***Natural gas only.***

Multiple boiler installations

The **Concord CXD range** is certificated for use in multiple boiler installations, providing that the following conditions are satisfied.

1. A downdraught thermostat kit MUST be fitted to ALL boilers in the installation.
2. A maximum of 6 boilers may be used with a single flue header.
3. For clearances see Frame 2.

A comprehensive guide to multiple installations of Concord CXD boilers is available.

WARNING. Failure to use a downdraught kit on every boiler in a multiple boiler installation will negate the certification of the installation and therefore contravene the essential requirements of the Gas Appliance Directive.

Note. *The **CXD 40, CXD 50 and CXD 60** boilers are intended for use as commercial boilers and are NOT certified for use in domestic applications. A domestic installation is defined as an installation where the boiler takes its combustion air from a living space or from a room directly or indirectly connected with the living space. It is important, therefore, that no external control devices - e.g. flue dampers, economisers etc., are directly connected to this appliance unless covered by these Installation and Servicing Instructions or otherwise recommended by* **Caradon Plumbing Limited** *in writing. If in doubt please enquire.*

Any direct connection of a control device not approved by **Caradon Plumbing Limited** *could invalidate the British Gas Certification, the normal appliance warranty and could also infringe the Gas Safety Regulations. Table 1, Table 2 and the descriptive notes which follow contain all the essential data likely to be required by the installer.*

Table 1- Performance Data

Boiler			CXD 40	CXD 50	CXD 60	CXD 70	CXD 80	CXD 90	CXD 100
Number of sections				3	4	4	5	5	6 6
Boiler Input	Gross	kW	31.5	37.5	45.1	52.8	60.4	68.1	75.0
Low Rate		Btu/hr x 1000	107.5	128.0	154.0	180.0	206.0	232.4	256.0
	Nett	kW	28.4	33.8	40.6	47.5	54.4	61.4	67.6
		Btu/hr x 1000	97.0	115.3	138.5	162.5	185.6	209.5	231.7
Boiler Input	Gross	kW	52.5	62.5	75.1	87.93	100.7	113.5	125.0
		Btu/hr x 1000	179.1	213.3	256.2	300.0	343.6	387.3	426.5
High Rate	Nett	kW	47.3	56.3	67.7	79.2	90.7	102.3	112.6
		Btu/hr x 1000	161.4	192.1	231.0	270.2	309.5	349.0	385.2
Boiler output		kW	42.0	50.0	60.08	70.34	80.56	90.8	100.0
High Rate		Btu/hr x 1000	143.3	170.6	205.0	240.0	274.9	309.8	341.2
Gas rate		m^3/h	5.0	5.96	7.16	8.38	9.6	10.82	11.91
		ft^3/h	176.6	210.5	252.9	295.9	339.0	382.1	420.6
Approximate	4.5% CO_2 &100°C.		0.044	0.052	0.063	0.073	0.084	0.094	0.104
flue gas volume		m^3/sec							
in the secondary	4.5% CO_2 & 212°F.								
flue of the chimney system		$ft.^3m$	93	110	133	155	178	199	220
Manifold setting pressure		mbar	3.9	3.5	3.9	3.5	3.8	3.6	4.1
Low Rate		in.w.g.	1.6	1.4	1.6	1.4	1.5	1.4	1.6
Manifold setting pressure		mbar	11.7	10.5	12.2	10.4	10.3	11.2	11.5
High Rate		in.w.g.	4.7	4.2	4.9	4.2	4.1	4.5	4.6
Seasonal efficiency (SEDBUK)*			[76.2]%	[76.2]%	[77.7]%	[76.7]%	[77.0]%	[77.3]%	[77.6]%

*The value is used in the UK government's Standard Assessment Procedure (SAP) for energy rating of dwellings.
The test data from which it has been calculated have been certified by BGplc 0087.

Note. *To obtain gas consumption, divide gross heat input (kW) by a calorific value of 37.8 (MJ/m^3)*

Table 2 - General Data

Boiler		CXD 40	CXD 50	CXD 60	CXD 70	CXD 80	CXD 90	CXD 100
Number of sections		3	4	4	5	5	6	6
Flow tappings	Rc (in. BSP)	2 x 2 at rear						
Return tappings	Rc (in. BSP)	2 x 2 at rear						
Maximum static head	metres (feet)	45.7 (150)						
Maximum pressure	bar (p.s.i.)	4.5 (65)						
Gas inlet connection	Rc (in. BSP)	3/4 (3/4)					1 (1)	
Min. dynamic gas	mbar *gauge*	15.0	15.0	16.2	15.0	15.0	15.0	15.4
pressure required at boiler inlet	in.w.g.	6.0	6.0	6.5	6.0	6.0	6.0	6.2
Electricity supply		230 Volts- single phase, 50 Hz, fuse 5 A						
Nominal flue size (to BS. 835)	mm	150	150	175	175	200	200	200
	in.	6	6	7	7	8	8	8
Diverter outlet socket	mm	184	184	213	213	238	238	238
internal diameter	in.	7.3	7.3	8.4	8.4	9.4	9.4	9.4
Length of burner bars (overall)	mm	377	497	497	617	617	737	737
	in	14.8	19.5	19.5	24.3	24.3	29.0	29.0
Main burner injectors (3 off)	size, mm	3.4	3.82	4.12	4.57	4.86	5.2	5.3
Approximate dry weight	kg	210	265	265	330	330	395	395
	lb.	463	584	584	727	727	871	871
Water content	litre	22	30	30	37	37	45	45
	gal.	4.8	6.6	6.6	8.2	8.2	9.9	9.9

Table 3 - Boiler Control specification Maximum Flow temperature 85 °C

Electricity supply	230V, 50Hz, fuse 5A
Ignition	5 attempts followed by non-volatile lockout.
Gas valve	High/Low and Off
Gas safety time	Maximum of 10 secs with 5 attempts with one min. between attempts.
Safety check	The control de-energises every four hours to check internal control functions.
Pump	Pump over-run operates if the flow temperature is greater than 75 °C.
Boiler thermostat	The boiler thermostat hysteresis is a maximum of 3 °C.

GAS CONTROLS

The gas controls consist of a high / low arrangement with direct burner ignition.

ELECTRICAL CONTROLS

***WARNING. THE** ON/STANDBY [1/0] button does **NOT** electrically isolate the boiler.*

The **CX D** incorporates an advanced microprocessor based control system which operates all electrical functions of the boiler including ignition, flame detection, thermostatic control, and high/low operation. In addition, the microprocessor has onboard servicing and commissioning instructions and a fault diagnosis programme.

The illuminated LED display gives a continual read-out of the boiler status and functions, but in the unlikely, event of a fault condition, will display the fault areas.

OPTION KITS

Pressure Gauge Kit

A pressure gauge is available for the range of boilers. Details for fitting are included with the pressure gauge.

Downdraught thermostat

This kit is optional when used on a single CX D installation, but mandatory when used on a multiple boiler installation.

Remote Indication Board (volt free)

This provides the ability for remote indication of lockout and overheat conditions.

Outside Sensor

This kit provides a sensor for temperature compensation when the outside temperature changes

DUTY

The range of boilers is suitable for: Combined indirect pumped domestic hot water ***and*** central heating systems; Independent indirect pumped domestic hot water ***or*** central heating systems.

Fully pumped systems may be open vented or sealed.

The range of boilers is NOT suitable for:

1. Gravity DHW systems.
2. Gravity heating systems.
3. Direct domestic hot water supply.

WATER CIRCULATION SYSTEM

Due to the compact nature of the boiler the heat stored within the castings at the point of shutdown of the burner must be dissipated into the water circuit in order to avoid the overheat thermostat tripping. In order to allow pump operation after burner shutdown the boiler control box incorporates a pump overrun facility which operates when the boiler switches off and until the flow temperature is below 75 ^{0}C and in order to make use of this the pump must be wired to the appropriate terminal L_2 (pump) in the boiler control box.

1. The minimum flow rate as given in Table 5 must be maintained whenever the boiler is firing and during the pump overrun period.
2. During the period of pump overrun there must be an open circuit of adequate water volume and or load. The minimum size of this circuit is given by the use of Graph 1.

   Examples shown on Graph 1

   a. For the **CXD 90** and **CXD 100** the minimum circuit during pump overrun could be a load of 6 kW with a volume of 31 litres or any other combination given by the relevant line.

   b. For the **CXD 70** and **CXD 80** the minimum circuit during pump overrun could be a load of 2 kW with a volume of 45 litres or any other combination given by the relevant line.

   The above circuit capacity during pump overrun may be achieved either by provision of an adequate bypass circuit or by ensuring that a zone of suitable size is open for circulation during this period by relevant control of zone valves or pumps.

1 WATER CONNECTIONS

Flow and return connections are 2" BSP.

A 1" BSP tapping is provided in the redundant return flange for the cold feed or expansion vessel connection.

Safety Valve

A safety valve must be sized and fitted in accordance with BS. 6644 for every type of system. The valve should be set at 0.7 bar (10 lb/in.^{2}) above the operating pressure in the boiler. The maximum safety valve setting is 0.7 bar (10 lb/in.^{2}) above the maximum design operating pressure of 4.5 bar (65 lb/in.^{2}).

Cold Feed/Open Vent

The independent cold feed and the open vent must comply with BS. 6644 and be of the following minimum size.

Boiler Size	Cold Feed	Open Vent
CXD 40 - 50	3/4"	1"
CXD 60-100	1"	1 1/4"

Sealed system filling point - refer to Frame 8

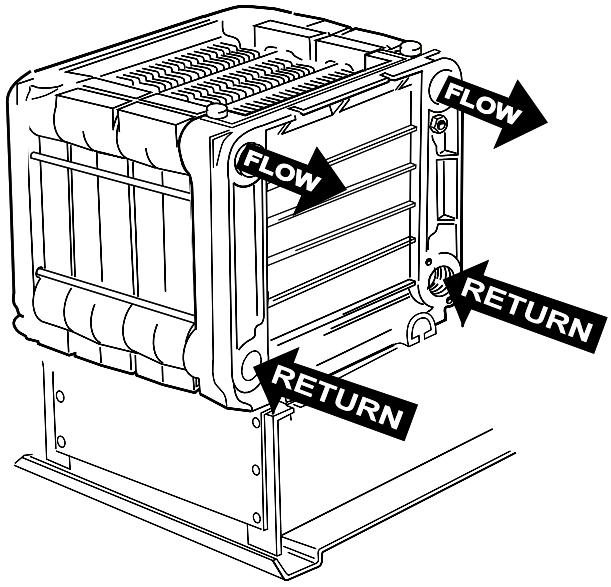

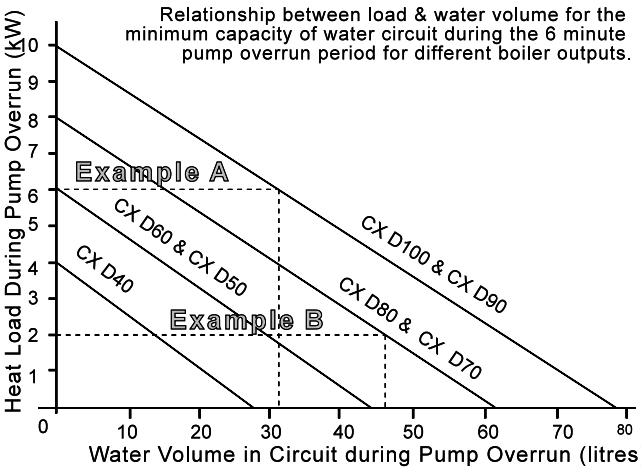

Graph 1 - Heat Load / Water Volume

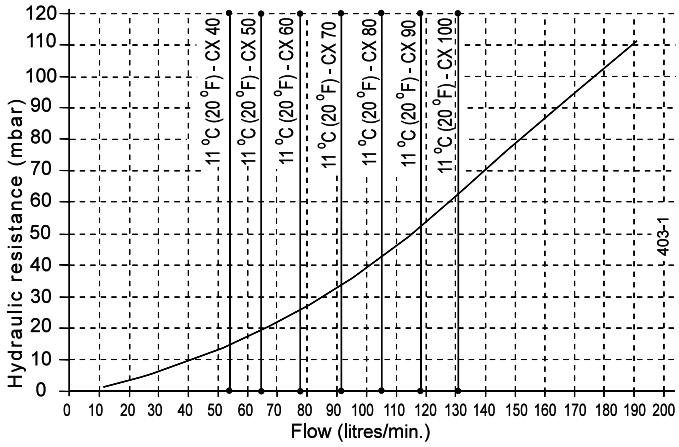

Graph 2 - Hydraulic Resistance

2 CLEARANCES & DIMENSIONS

Table 4

Boiler Size		CXD 40	CXD 50	CXD 60	CXD 70	CXD 80	CXD 90	CXD 100
Front clearance	mm (in)	750 (29 1/2)						
Rear clearance	mm (in)	0	0	0	150 (6)	150 (6)	300 (12)	300 (12)
Side clearance	mm (in)	50 (2)	50 (2)	50 (2)	50 (2)	50 (2)	100 (4)	100 (4)
Dimension **A**	mm (in)	754 (29 3/4)	887 (35)	887 (35)	1047 (41 1/4)	1047 (41 1/4)	1217 (48)	1217 (48)
Dimension **B**	mm (in)	108 (4 1/4)	108 (4 1/4)	122.5 (4 7/8)	122.5 (4 7/8)	135 (5 3/8)	190 (7 1/2)	190 (7 1/2)
Dimension **C**	mm (in)	931.6 (36 5/8)	931.6 (36 5/8)	931.6 (36 5/8)	931.6 (36 5/8)	931.6 (36 5/8)	893.6(35 3/16)	893.6(35 3/16)
Dimension **D**	mm (in)	177.5 (7)	187.5 (7 3/8)	187.5 (7 3/8)	224.5 (8 7/8)	224.5 (8 7/8)	271.5 (10 5/8)	271.5 (10 5/8)
Dimension **E**	mm (in)	69.0 (2 3/4)	79.0 (3 1/8)	79.0 (3 1/8)	116.0 (4 5/8)	116.0 (4 5/8)	163.0 (6 1/2)	163.0 (6 1/2)

POSITION OF BOILER

Minimum clearances required from walls or other fixed objects to allow for the free access of combustion air are shown in Table 4 above.

However, for maintenance purposes we suggest a minimum rear clearance of 50mm.

Any combustible material adjacent to the boiler and its flue system must be so placed or shielded as to ensure that its temperature does not exceed 65 °C (150 °F).

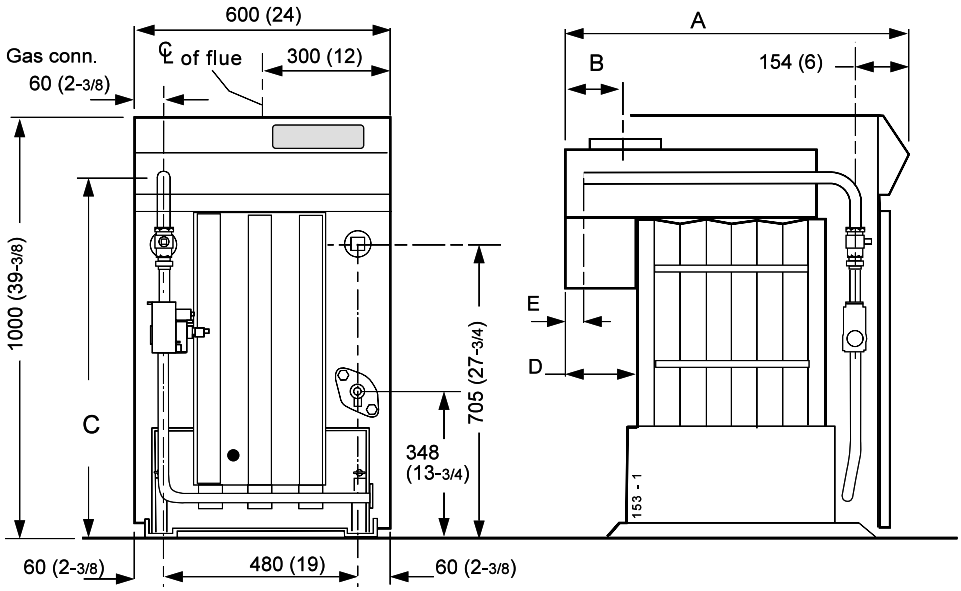

MULTIPLE BOILER INSTALLATIONS

The minimum installation clearances must conform to the dimensions given below:

CXD 40, 50, 60 & 70

Clearance between boilers = 50mm
Clearance at both ends of the multiple installation = 50mm*

CX 90 & 100

Clearance between boilers = 100mm

Clearance at both ends of the multiple installation = 100mm*

Rear clearance: sufficient clearance should be given at the rear of the boiler for connection of gas and water pipework.

*Additional clearance is required for access at either end of the installation.

The wiring diagrams in Frames 16,17 &18 illustrate the control methods for achieving the above.

3. Pump selection should take account of the hydraulic resistance given in Graph 2.

PUMP POSITIONS

Whenever practically possible the circulating pump(s) should be positioned so that it pressurises the system being served. The vertical distance between the pump(s) and any cold feed and expansion cistern MUST comply with the pump manufacturers requirements in order to avoid cavitation. These requirements override the information given in Frame 3 if the static head required for the pump(s) exceeds that required for the boiler.

Table 5 - Flow rates for fully pumped systems

Boiler	Minimum flow rates for a temperature difference of 35 °C (63 °F) l/s	g.p.m.
CXD 40	0.28	3.7
CXD 50	0.34	4.5
CXD 60	0.41	5.4
CXD 70	0.48	6.3
CXD 80	0.55	7.3
CXD 90	0.62	8.2
CXD100	0.68	9

MINIMUM FLOW OF WATER - Refer to Table 5

The system design must provide for an adequate flow rate through the boiler at all times when the boiler is firing. The minimum flow rate should correspond to a temperature difference across the boiler flow and return of 35°C (63°F), assessed at catalogue rating.

WATER TREATMENT FOR HOT WATER AND HEATING BOILERS

There is a basic need to treat the water contained in all heating and indirect water systems, particularly open vented systems. It is assumed, incorrectly, that because boilers are operating in conjunction with what is apparently a closed circuit an open vented system will not, under normal circumstances, allow damage or loss of efficiency due to hardness salts and corrosion once the initial charge of water has been heated up a few times.

1mm of lime reduces the heat transfer from metal to water by 10%.

In practice the deposition of these salts is liable to cause noises from the boiler body or even premature boiler failure. Corrosion and the formation of black iron oxide sludge will ultimately result in premature radiator failure.

Open vented systems are not completely sealed from the

3 OPEN VENTED SYSTEMS - Minimum static head requirements

Particular reference should be made to BS. 6644: Section 2; Subsection 10 and Guidance note PM5 "Automatically controlled steam and hot water boilers" published by the Health and Safety Executive.

The information and guidance given below is not intended to override any requirements of either of the above publications or the requirements of the local authority, gas or water undertakings.

Other British Standards applicable are BS.5422 & BS.6700.

The information provided is based on the following assumptions:

1. An independent open vent/safety pipe connection is made to the redundant boiler flow tapping or is positioned immediately after the system flow pipe connection to the header, as shown.
2. An independent cold feed/expansion pipe connection is made to the redundant boiler return tapping. Cold feed/expansion pipe connections made to the pumped system return will result in an increase in the static head requirement, caused by the additional resistance of the distributor tube. Surging may also increase.
3. The maximum flow rate through the boiler is based on a temperature difference or 11°C at full boiler output and the circulating pump is positioned in the flow to the system.
4. The boiler is at the highest point of circulation in the system. Systems designed to rise above the boiler flow tappings will automatically require a minimum static head higher than that shown.
5. The position of the open vent/safety pipe above the expansion cistern water level is given as a guide only. The final position will depend upon the particular characteristics of the system. Pumping over of water into the expansion cistern must be avoided.

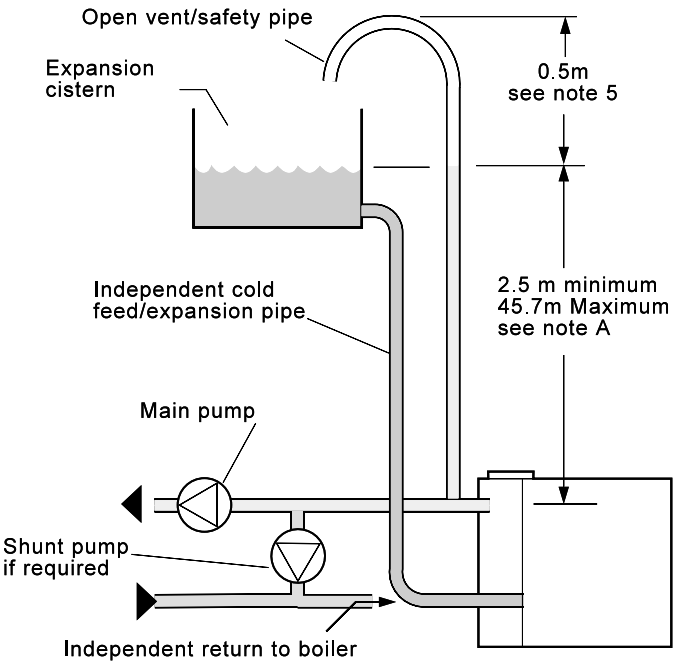

Note A.

This minimum height must be increased, if necessary, to comply with the minimum head required by the pump manufacturer in order to avoid cavitation.

Note B.

This diagram does not show safety valves, water flow switches, etc., necessary for the safe operation of the system.

atmosphere if proper venting and expansion of system water is to be achieved. The same tank is used to fill the system with water and it is through the cold feed pipe that system water expands into the tank when the boiler passes heat into the system. Conversely, when the system cools, water previously expelled is drawn back from the tank into the system together with a quantity of dissolved oxygen.

Even if leakage from the heating and hot water system is eliminated there will be evaporation losses from the surface of the tank which, depending upon ambient temperature, may be high enough to evaporate a large portion of the system water capacity over a full heating season.

There will always be corrosion within a heating or hot water system to a greater or lesser degree, irrespective of water characteristics, unless the initial fill water from the mains is treated. Even the water in closed systems will promote corrosion unless treated. For the reason stated, **Caradon Plumbing Limited** strongly recommend that when necessary the system is thoroughly cleaned, prior to the use of stable inhibitor, which does not require continual topping up to combat the effects of hardness salts and corrosion on the heat exchangers of the boiler and associated systems.

Caradon Plumbing Limited advise contact directly with specialists on water treatment such as:

Fernox Manufacturing Co. Ltd., or
Tandem House, Marlowe Way,
Croydon, Surrey CRO 4XS

Tel 0870 5601 5000

Sentinel Division,
Betz Dearborn Ltd.,
Widnes,
Cheshire, WA8 8UD
Tel. 0151 424 5351

INSTALLATION REQUIREMENTS

The appliance must be installed by a CORGI registered installer identified by ❀.

The installation of the boiler must be in accordance with the relevant requirements of the Gas Safety Regulations, current I.E.E. (BS. 7671) Regulations, Model Water Bye-laws, local water authority bye-laws and it should also comply with any relevant requirements of the local gas supplier, local authority and the relevant British Standard Codes of practice and building regulations.

These appliances are NOT suitable for installation where they will be exposed to the elements. A boiler room shall be constructed or adapted to meet the requirements of BS 6644. The maximum ambient temperature is 32 ^{0}C at 1.5 metres from the floor with a maximum humidity of 90% RH.

FOR SMALL PIPE INSTALLATIONS;
BS. 6891; Installation of low pressure pipework

FOR LARGE PIPE INSTALLATIONS:

British Gas Publications:

IGE-UP-1: Purging Procedures of Non-domestic Gas Installations. Soundness Testing Procedures for Industrial and Commercial .

IM11: Flues for Commercial and Industrial Gas Fired Boilers and Air Heaters.

Gas Installations

IGE-UP-2: Guidance notes on the Installation of Gas Pipework, Boosters and Compressors in Customer's Premises Equal to or Greater than 25mm (Non-domestic).

BS.6644: Installation of Gas Fired Hot Water Boilers 60kW to 2MW.

CP341: Water Supply.

CP342:2: Centralised Hot Water Supply.

Model Water Byelaws.

Manufacturers notes must not be taken, in any way, as overriding statutory obligations.

The appliance must be installed in a room separated from living rooms and provided with appropriate ventilation direct to the outside - see Table 6.

4 SEALED (PRESSURISED) SYSTEMS

Working pressure 4.5 bar maximum.

Particular reference should be made to BS. 6644: Section 2; Subsection 11 and Guidance note PM5 "Automatically controlled steam and hot water boilers" published by the Health and Safety Executive.

The information and guidance given below is not intended to override any requirements of either of the above publications or the requirements of the Local Authority, gas or water undertakings.

In general commercial closed pressurised systems are provided with either manual or automatic water make up.

On both instances it will be necessary to fit automatic controls intended to protect the boiler, circulating system and ancillary equipment by shutting down the boiler plant if a potentially hazardous situation should arise.

Examples of such situations are low water level and operating pressure or excessive pressure within the system. Depending on circumstances controls will need to be either manual or automatic reset. In the event of shut down both visual and audible alarms may be necessary.

Pressure vessels used must comply with BS. 4814 and must be sized on the basis of the total system volume and initial charge pressure.

Initial minimum charge pressure should not be less than 0.5 bar (7.2 psi) and must take account of static head and specification of the pressurising equipment. The maximum water temperatures permissible at the point of minimum pressure in the system is specified in Guidance Note PM5.

When make up water is not provided automatically it will be necessary to fit controls which shut down the plant in the event of the maximum system pressure approaching to within 0.35 bar (5 psi) if safety valve setting.

Other British Standards applicable to commercial sealed systems are:-

BS. 6880: Part 2.
BS. 1212
BS. 6281: Part 1
BS. 6282: Part 1
BS. 6283: Part 4

FOUNDATION

The boiler must stand on a non-combustible floor (i.e. concrete or brick) which must be flat, level and of a suitable load bearing capacity to support the weight of the boiler (when filled with water) and any ancillary equipment.

If the boiler is mounted on a plinth then the dimensions must exceed the plan area of the boiler by at least 75mm on each side.

VENTILATION

Safe, efficient and trouble-free operation of conventionally flued gas boilers is vitally dependent on the provision of an adequate supply of fresh air to the room in which the appliance is installed. Ventilation by grilles communicating directly with the outside air is required at both high and low levels. The minimum free areas of these grilles must be according to the following scale:

Table 6 - Ventilation Requirements

Total input rating of boilers	Position of air vents	Air vent areas (air direct from outside)
Upto 2 MW	HIGH LEVEL	270 cm^2 plus 2.25 cm^2 per kW in excess of 60 kW total rated input
Upto 2 MW	LOW LEVEL	540 cm^2 plus 4.5 cm^2 per kW in excess of 60 kW total rated input

Position ventilation grilles to avoid the risk of accidental obstruction by blockage or flooding. If further guidance on ventilation is required then consult BS.6644.

AIR SUPPLY BY MECHANICAL VENTILATION

The supply of air by mechanical means to a space housing the boiler should be by mechanical inlet with natural or mechanical extraction. Mechanical extract ventilation with natural inlet must not be used.

Where a mechanical inlet and a mechanical extract system is applied, the design ventilation flow rates should be as in Table 4 of BS.6644.

The requirements for air supply by mechanical ventilation are given in BS.6644.

Note. *For mechanical ventilation systems an automatic control should be provided to cause safety shutdown or lockout of the boiler(s) in the event of failure of air flow in either inlet or extract fans.*

IMPORTANT. The use of an extractor fan in the same room as the boiler (or in an adjacent, communicating room) can, in certain conditions, adversely affect the safe operation of the boiler. Where such a fan is already fitted (or if it is intended to fit an extractor fan after installation of the appliance) the advice of the gas supplier should be obtained.

Tests for spillage of products from the draught diverter when the extractor fan is running and all doors and windows are shut should be carried out after installation, If spillage is detected, the area of permanent ventilation must be increased.

CHIMNEY SYSTEM

To ensure the safe and satisfactory operation of the boiler then the chimney system (which may be common or individual, in the case of twin or multiple boiler installations) must be capable of the complete evacuation of combustion products at all times. The effective height of the chimney terminal(s) above the boiler outlet(s) must ensure sufficient buoyancy to overcome the resistance of the bends, tees and runs of the flue pipe involved and shall terminate in a down draught free zone. The number of bends and lengths of horizontal flue pipe used should be kept to a minimum in order to reduce gas flow resistance.

Compliance with the recommendations made in BS.6644; British Gas publication IM 11 'Flues for Commercial and Industrial Gas Fired Boilers and Air Heaters' and the' Third Edition of the 1956 Clean Air Act Memorandum' should be strictly observed where applicable.

The chimney design should avoid the formation of excessive quantities of condensate. For this reason it is recommended that all chimneys are insulated and lined. In the case of brick or similar structures a stainless steel rigid or flexible flue liner (grade 304/316) may be used in conjunction with a 50 mm (minimum) thick layer of vemiculite or perlite granules between the liner and the inner skin of the chimney body. Liners should be sealed at both top and bottom.

As the **Concord CXD** range of boilers is supplied complete with an integral draught diverter, a diverter MUST NOT be fitted within the chimney system.

Drainage points positioned at the bottom of all vertical chimney sections should be provided. Drain pipes should be no less than 25 mm I.D., manufactured from acid condensate resistant material such as stainless steel and be positioned so that pipe runs and discharge points are not subject to the effects of frost and that flue gases cannot leak into the boiler room.

Care should be taken to ensure the specification of the chimney is suitable for the application by reference to the manufacturers literature. **Caradon Plumbing Limited** can offer advice on the design of suitable chimney systems.

GAS SUPPLY

If there is any doubt regarding the capacity of the gas meter, the available gas pressure, the adequacy of existing service pipes or the size required for new service pipes then the advice of the gas supplier should be requested.

Installation pipework should be fitted and tested for gas soundness in accordance with BS. 689:1 IGE-UP-1 for small installations and IGE-UP-2 for large installations.

The local gas supplier must be consulted if it is necessary to employ a gas pressure booster.

ELECTRICAL SUPPLY

WARNING. This appliance must be efficiently earthed.

A 230 V - 50 Hz mains supply is required, fused at 5 amps.

Wiring external to the appliance MUST be in accordance with the I.E.E. (BS. 7671) Wiring Regulations and any local regulations which apply.

For details of connections see Frame 14.

5 CONCORD CXD BOILER ASSEMBLY - Exploded view

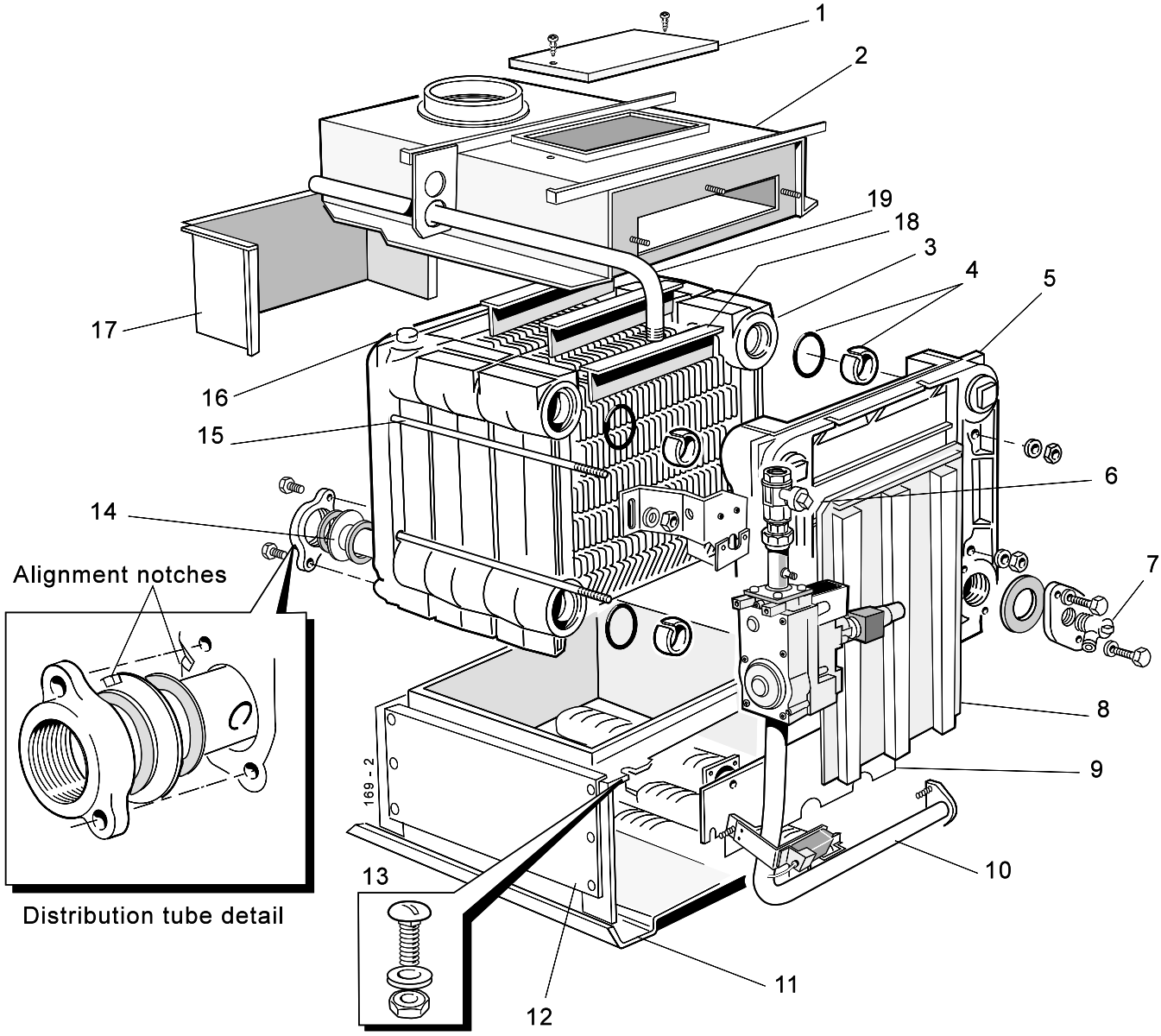

Legend

1. Cleanout cover
2. Collector hood
3. Middle section
4. Section alignment rings & 'O' rings
5. End section
6. Gas cock
7. Drain cock
8. NOx duct
9. Front plate
10. Burner manifold assy.
11. Base plate
12. Combustion chamber
13. Section bolt
14. Distribution tube
15. Tie rods
16. Thermostat pocket
17. Spillage skirt
18. Flueway baffles
19. Gas pipe

6 PACKAGING

Check that all these packages are complete and have been correctly received on site.

Factory assembled boilers are despatched from the works as fully packaged units comprising:

1. Assembled boiler body (with distributor tube) on a wooden pallet base enclosed in a wooden crate.
2. Carton containing the casing, fastenings and flue brush.
3. Carton containing the installation pack and instruction books.
4. Carton containing the control box.

JACKET PACK contains

- Front panel ..... 1 off
- Side panel ..... 2 off
- Top panel ..... 1 off
- Flue brush ..... 1 off
- Jacket hardware pack ..... 1 off

INSTALLATION HARDWARE PACK contains

- M10 washer ..... 4 off
- Split pin ..... 1 off
- Strain relief bush ..... 1 off
- M10 x 25 Hex. Hd. screw ..... 2 off
- M10 x 35 Hex. Hd. screw ..... 2 off
- Gasket EPDM Type EP600 ..... 3 off
- Plug 2" taper Sq. Hd ..... 3 off
- Inst/Service instructions ..... 1 off
- User's instructions ..... 1 off
- Flange RC 1" ..... 1 off
- 2" BSP Flange (distributor tube) ..... 1 off
- 2" Installation pipe (handling bars) .... 2 off
- Thermostat pockets ..... 2 off

7 PACKAGING AND BOILER REMOVAL

1. Remove the jacket carton and outer packaging frame.
2. Remove the jacket pack support frame.
3. Remove the distributor tube pack, controls package and installation pack.
4. Remove the 2" BSP steel handling bars from installation pack.
5. Remove 4 base bolts holding assembly to the packaging base.
6. Remove the wood screws securing the front cross member on the packaging base.
7. Remove the gas cock by unscrewing the union and screw in the handling bars into the 2 front tappings. Protect the exposed inlet gas union from ingress of dirt.
8. Knock out front spacing blocks from the packaging base, ensuring that the boiler assembly is supported, using 2" BSP handling bars.
9. Using the handling bars, manoeuvre the boiler forward on the packaging base and slide over collapsing base on to the floor.

   Note.
   Before manoeuvring the boiler into its final position see Frame 8

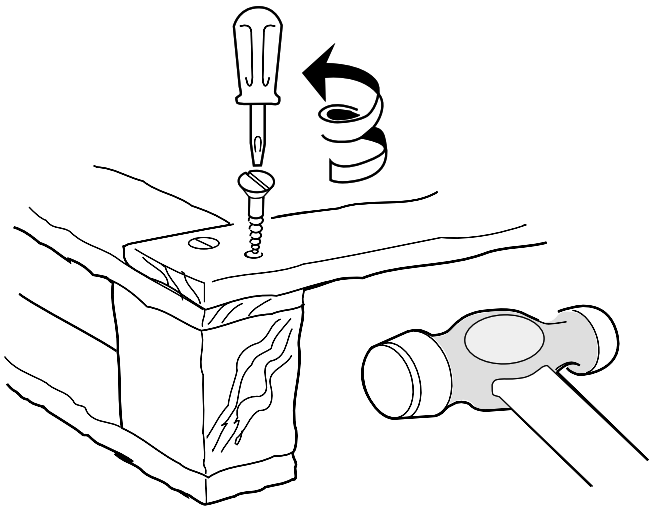

8 BOILER ASSEMBLY

1. Fit the distributor tube (supplied with the boiler) into one of the return connections. That is one of the rear lower ports. Refer to Frame 5.

   Fit the flange using the M10 x 35mm screws and washers provided.

   Ensure that the tube flange aligns horizontally and that the 2 sealing gaskets are correctly assembled on the tube. Refer to alignment notches in Frame 5.

2. Fit the 1" tapped flange to the other lower rear connection using the gasket and M10 x 25mm screws and washers provided.

3. Temporarily screw the 2 handling bars (2" pipe) into the top tappings and manoeuvre the boiler into position.

4. Complete the system connections using suitable jointing compound as follows:

   a. The flow connection may be made to either of the rear top tappings (either at the same side as the return or opposite the return).
   To avoid air locks, any reduction in pipe size must be made in the vertical plane or achieved by using eccentric bushes.

   b. The 1" tapping in the redundant return flange may be used for the cold feed on an open system or connection of a pressure vessel if on a sealed system.
   If not required for this purpose it should be plugged.

   c. Fit the 2 thermostat pockets. Refer to Frame 9.

   Note. *Frame 9 shows the relationship between the overheat thermostat and the flow tapping.*

   d. Complete the water connections by plugging the two front top tappings with the 2" BSP plugs provided.

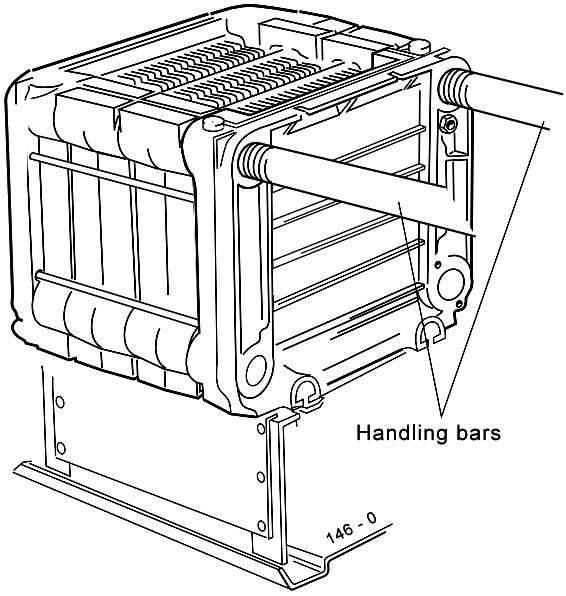

9 SYSTEM CONNECTIONS

One flow and return connection should be made to the rear of the boiler - either on one side or opposite sides.

The distributor tube and gaskets, supplied with the boiler, must be connected into the pumped return connection. Refer to Frame 8.

2 thermostat pockets are supplied in the installation pack. These must be fitted in the 2 top 1/2" BSP tappings at either side of the rear of the heat exchanger.

Position the overheat thermostat phial into the thermostat pocket at the opposite side to the flow pipe. The illustrations below show the rear of the boiler with the flow and relative overheat thermostat positions.

Ensure that the overheat thermostat phial and control sensor are correctly secured in the pockets. Refer to Frame 13.

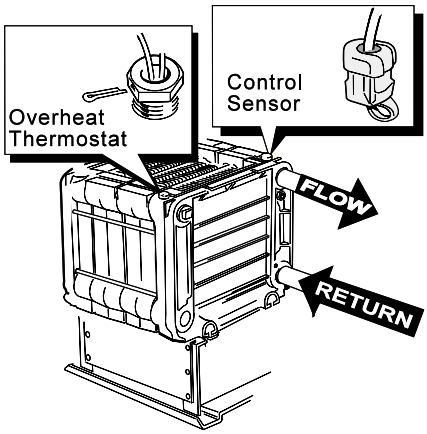

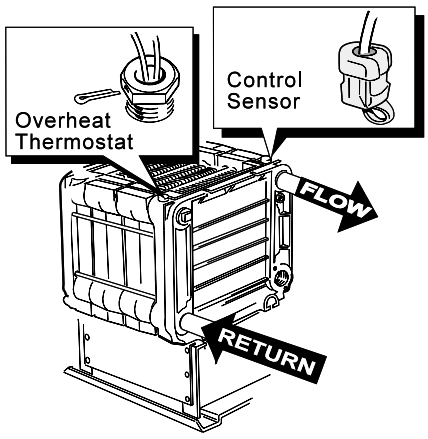

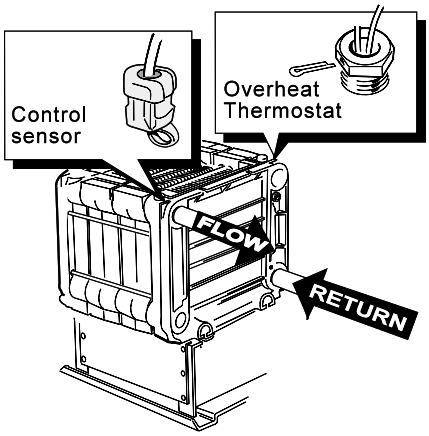

10 FLUE CONNECTION

1. Complete the flue connection.
2. The boiler is designed to accept flues to BS. 835 and should be sealed with an approved boiler putty.

11 GAS CONNECTION

1. Connect the gas supply to the gas inlet pipe at the rear LH side of the boiler.
2. Table 2 gives details of the inlet connection size and the minimum working pressures.

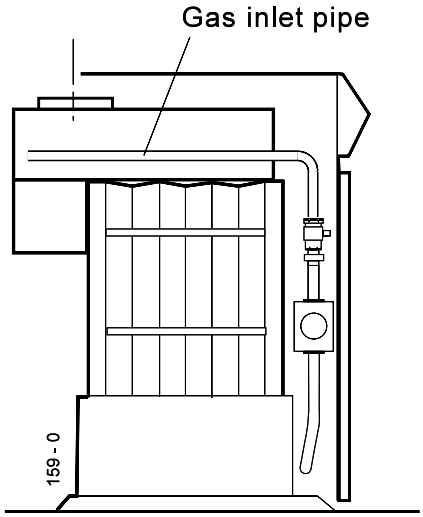

12 CASING ASSEMBLY

1. Unpack the control box from its carton and release the temperature sensing probe strapped to the back of the box.

   The boiler casing should now be fitted.

   A jacket hardware pack contains all the screws required for assembly.
2. Slide bottom of the side panel on to the studs on the base tray.
3. Screw the side panel to the support angle. Repeat for other side.

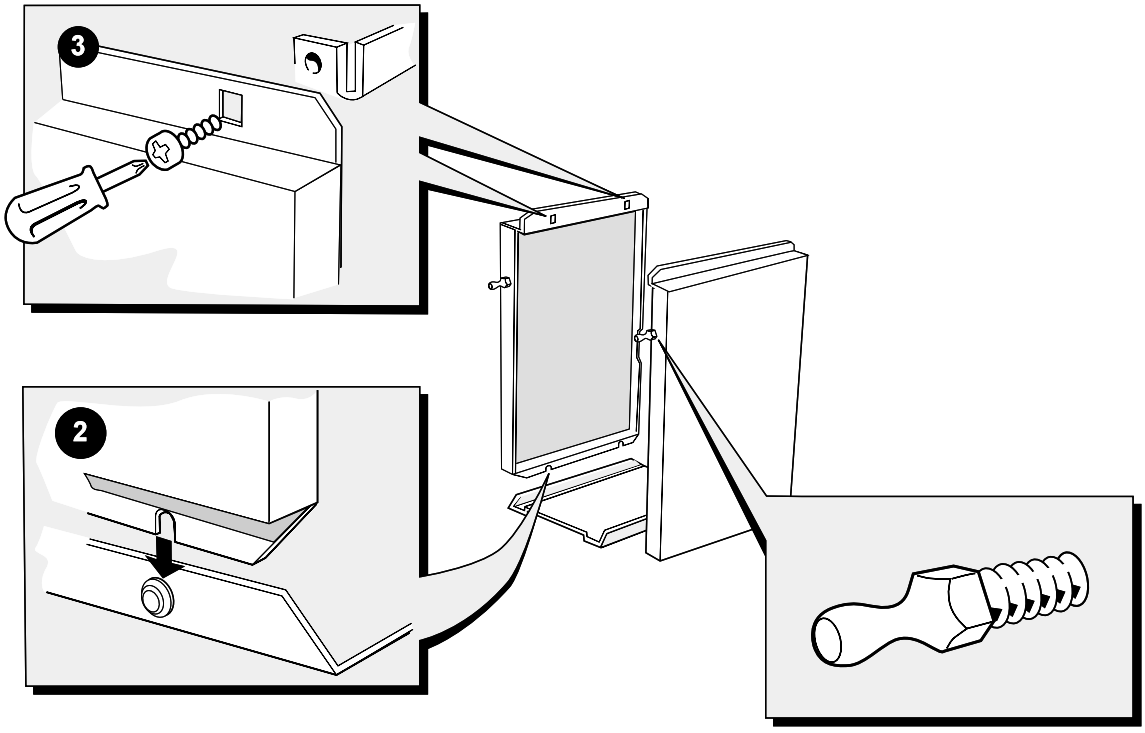

13 CASING ASSEMBLY - continued

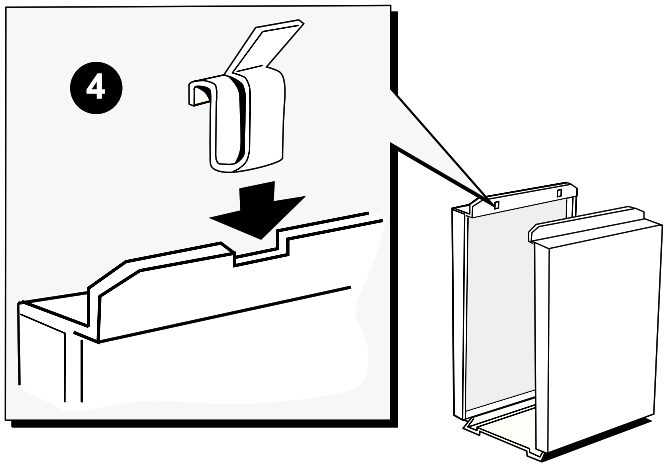

4. Fit 3 clips to the top of each side panel.
5. Fit the spire clips to the side casing panels.
6. Hook on the control box to side panels.
   Screw in self tapping screws at the bottom of the control box to fix it to the side panels.

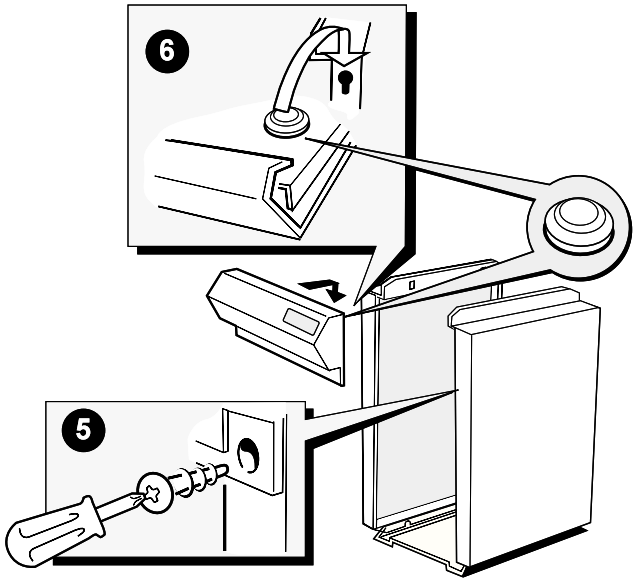

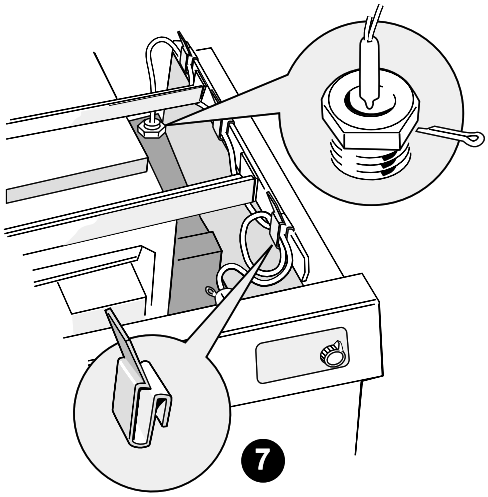

7. Route the thermostat capillary through the cable clips as shown.
   Ensure the phial is correctly seated in the correct pocket opposite side to the flow connection. Refer to Frame 9.
   Secure with the split pin provided.

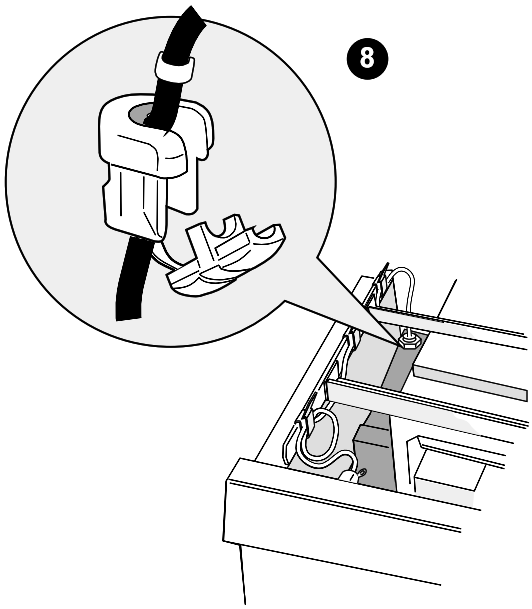

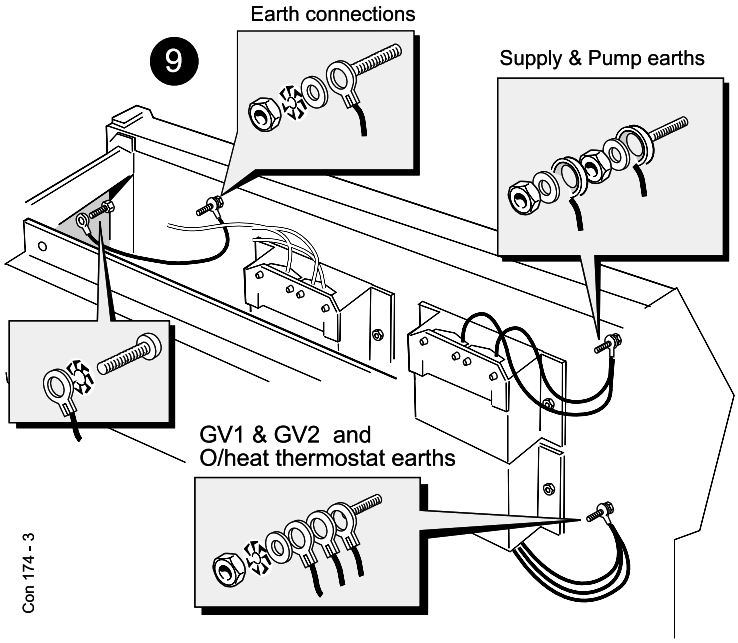

8. Route the temperature sensing probe through the cable clips provided and into the thermostat pocket adjacent to the flow connection.
   Fit the plastic Heyco bush over the sensor lead at the line shown and insert it into the thermostat pocket.
   Ensure that the Heyco bush is correctly located.
9. Fit earth leads as shown

14 ELECTRICAL CONNECTIONS

Connection must be made in a way that allows complete isolation of the electrical supply - such as a double pole switch, having a 3mm (1/8") contact separation in both poles, or a plug and socket serving only the boiler and system controls. The means of isolation must be accessible to the user after installation.

This should serve only the boiler, together with its controls and pumps. The supply must be wired direct to the boiler control box and must not be interrupted by any system controls. The pump(s) and any system controls must be wired back to the boiler control box.

The mains supply to the boiler must be wired into the boiler terminals L1, N on the plug-in Mains voltage connector shown below and in Frame 15. The earth must be wired to the earth post as shown in Frame 13.

The control box incorporates a pump overrun device which is necessary to dissipate residual heat after plant shutdown. It is essential that the main pump (or shunt pump if used) is wired to the pump terminals marked L2, N on the plug-in Mains voltage connector shown below and in Frame 15. The earth must be wired to the earth post as shown in Frame 13.

If no external controls are fitted, it is essential that a link is wired in place of it on the "mains voltage connector".

The flow switch should be connected via volt free contacts to the 'Flow S' terminals. A link may be fitted in place of the flow switch but the control will not be able to analyse the faulty flow switch, if such a failure should occur. Either of the above must be fitted or the boiler will not operate.

Any system controls should be connected, via volt free contacts, to the terminals marked 'EXT C'. **Do NOT connect an external clock to these contacts or any mains voltage.** If no external controls are fitted a link must be fitted across 'EXT C' terminals.

The boiler provides frost protection via the boiler sensor. If an external frost thermostat is required contact **Caradon Plumbing Limited.**

If the Downdraught flue thermostat is to be fitted then the link (marked TTB) should be removed from the plug-in connector.

The internal wiring of the boiler control box is shown in Frame 15.

Wiring should be PVC insulated cable, not less than 0.75mm^2 (24/0.2mm). All fuses must be ASTA approved to BS. 1362

The length of the conductors between the cord anchorage and the terminals must be such that the current carrying conductors become taut before the earthing conductor, if the cable or cord slips out of the cord anchorage.

The earth connection MUST NEVER be omitted.

Wire the earths as shown in Frame 13.

All wiring between entry at the rear of the boiler and the connection box must be secured neatly under the cable clips provided. Wiring must never be allowed to come into contact with any heated surfaces.

Carefully route the electrical leads from the gas valve/ spark generator behind the LH panel return and secure with clip as shown.

Fit the plug-in connector into the mains voltage connection box behind the control box.

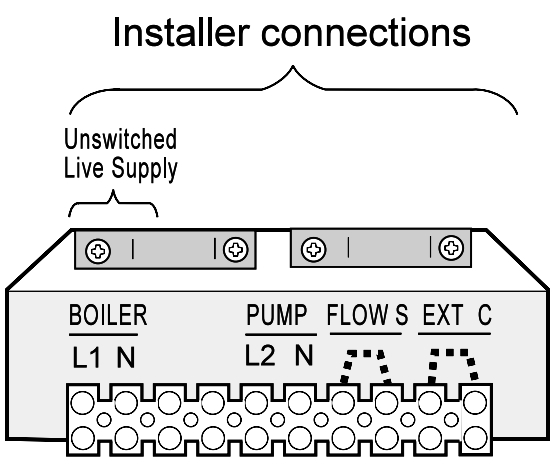

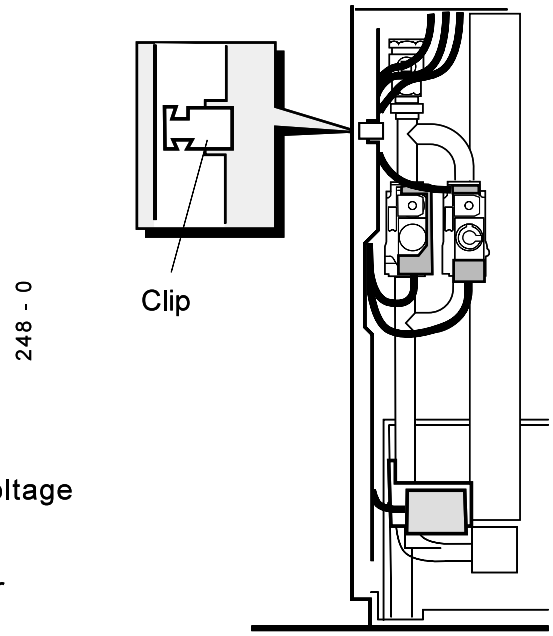

15 INTERNAL WIRING

LEGEND

b blue	**br** brown	**y** yellow	**y/g** yellow/green	**v** violet
bk black	**r** red	**w** white	**or** orange	**pk** pink

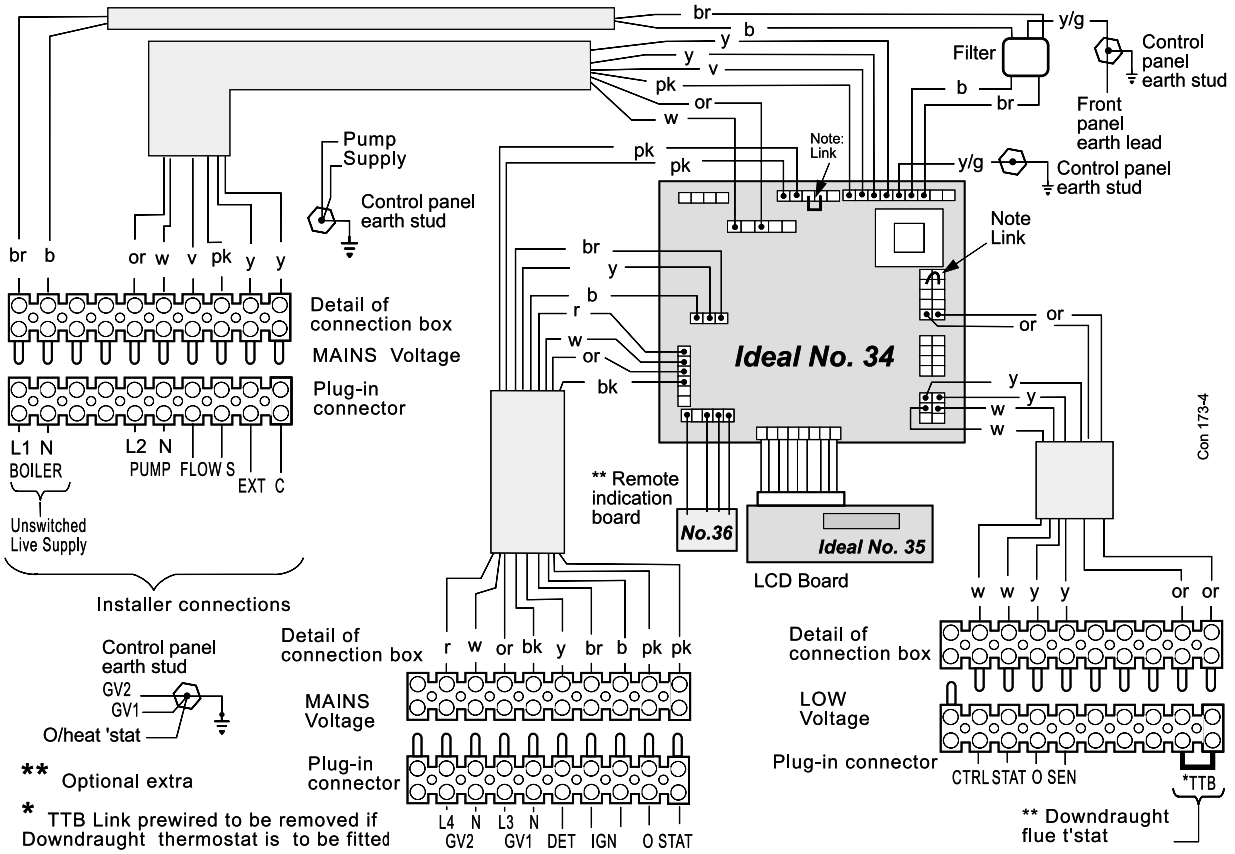

16 ZONES WITH BI-DIRECTIONAL MOTORISED VALVES

IMPORTANT

Terminal L2 may control the appropriate pump(s) directly, provided that the total running or starting current does not exceed 6A (resistive or inductive): if this rating would be exceeded, then appropriate switchgear must be used to control the pumps indirectly.

Three zones are illustrated but the principles may be extended as required, provided the above conditions are met. Each relay will then require as many contacts as there are zones.

Overrun

Since any zone may be the load during overrun, all zones MUST individually be able to satisfy the conditions in the foregoing paragraph. If not all zones can do this then consider other means of control, detailed on other sheets.

Normal operation

When any thermostat is satisfied while others are calling for heat, power is available via relay contacts to close the valve for that zone. When all thermostats are satisfied (also when the clock period ends) all relays will be off, so the zone valves which were open will remain open for the pump overrun period.

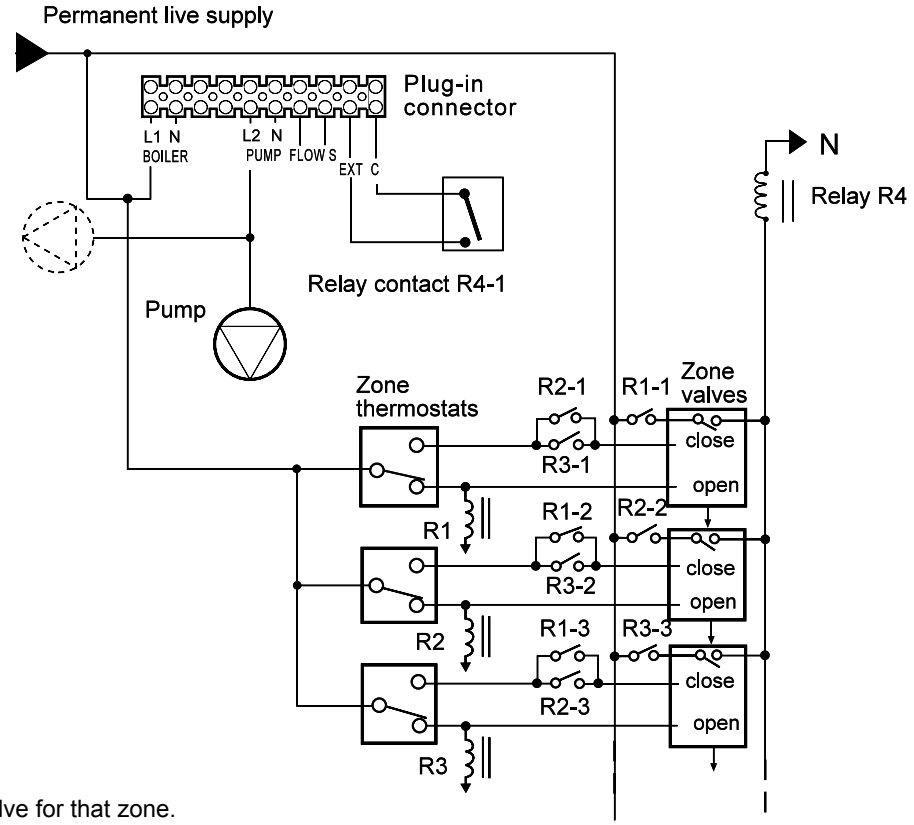

At the start of the next call for heat (or the next clock period) valves on zones not calling for heat will motor shut.

Water circulation system - refer to page 5

17 ZONES WITH INDIVIDUALLY PUMPED ZONES (3 zones shown)

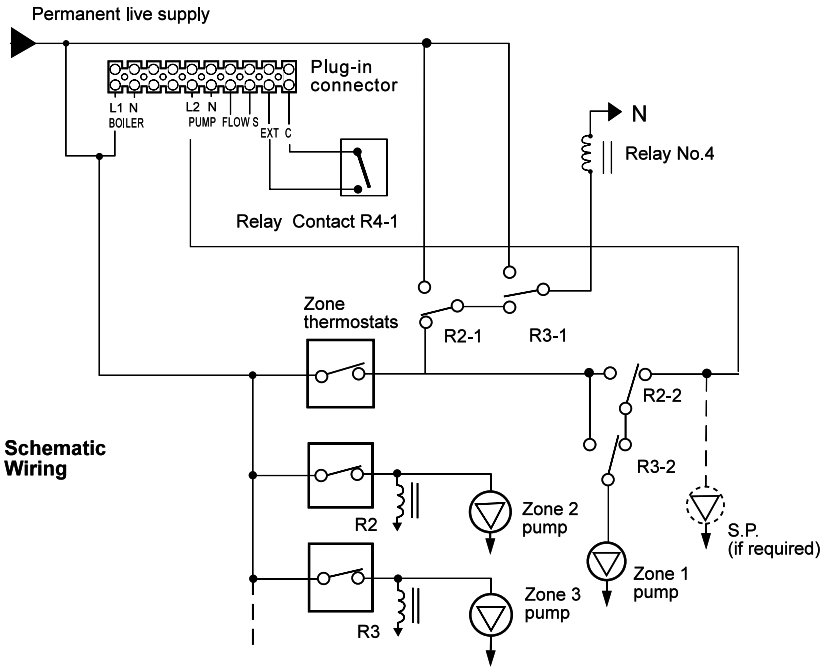

IMPORTANT

Terminal L2 may control the appropriate pump(s) directly, provided that the total running or starting current does not exceed 6A (resistive or inductive): if this rating would be exceeded then appropriate switchgear must be used to control the pumps indirectly.

Three zones are illustrated but the principles may be extended as required, provided the above conditions are met. For each zone (except Zone 1) a relay with 2 C/O contacts is required.

Overrun
During overrun periods, Zone 1 pump performs the overrun facility; this zone, therefore, must satisfy the conditions in the foregoing paragraphs and Graph 1.

Normal operation
During a call for heat on Zone 1 only, Zone 1 thermostat energises the boiler, which in turn energises Zone 1 pump from terminal L2.

During a call for heat on other zones the appropriate relay directs power to L1 to energise the boiler, at the same time ensuring that Zone 1 pump is controlled by Zone 1 thermostat.

Water circulation system - refer to page 5

18 ZONES WITH SPRING-RETURN MOTORISED VALVES

IMPORTANT

Terminal L2 may control the appropriate pump(s) directly, provided that the total running or starting current does not exceed 6A (resistive or inductive): if this rating would be exceeded then appropriate switchgear must be used to control the pumps indirectly.

Three zones are illustrated but the principles may be extended as required, provided the above conditions are met. Only one relay is required, irrespective of the number of zones.

Overrun
During overrun and dormant periods, Zone Valve 1 is held open. This zone, therefore, MUST satisfy the conditions in the foregoing paragraphs and Graph 1.

Normal operation
During a call for heat on Zone 1 only, the boiler energises via Zone 1 thermostat and the normally closed contacts of the relay.

During a call for heat on other zone(s), the relay will be energised by the auxiliary switch on the zone valves. This provides power to energise the boiler. If, in addition, Zone 1 now calls for heat, its thermostat will open Zone 1 valve via the normally open contacts of the relay.

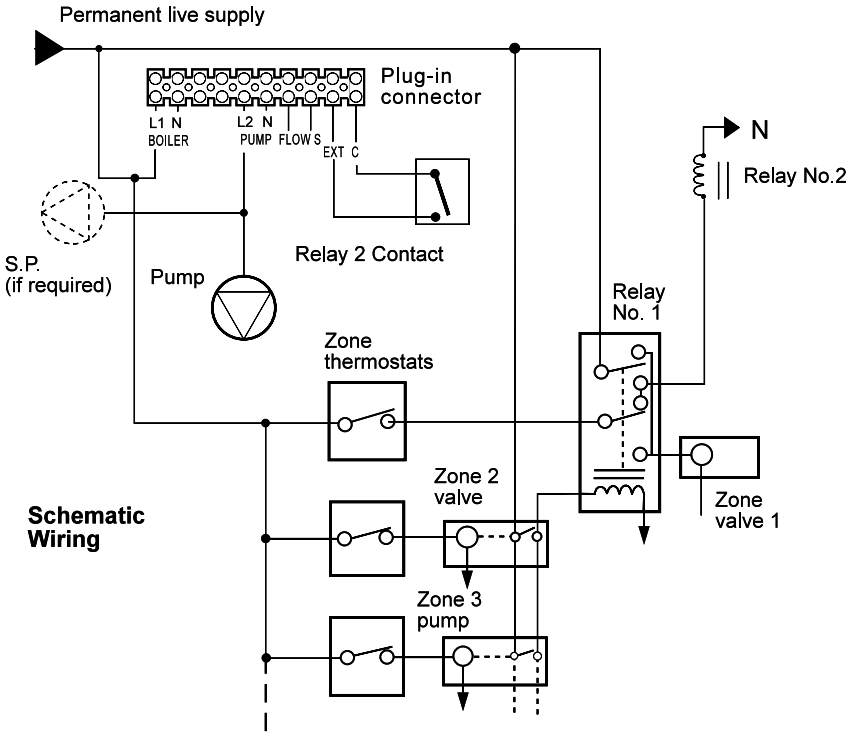

When the clock period ends, Zone valve 1 will (stay) open via normally closed relay contacts to achieve pump overrun.

Water circulation system - refer to page 5

19 COMMISSIONING AND TESTING

GENERAL

Check that all drain cocks are closed, that any stop valves fitted to the flow and return pipes are open and that the system has been filled and properly vented.

PURGING

Check that the electricity supply is switched OFF.

Remove the jacket lower front panel.

Extinguish all naked lights and open all doors and windows. DO NOT SMOKE. Check that the gas supply is turned ON at the meter and open the main gas inlet cock. Loosen the union and allow air to be purged from the gas line until gas is smelled. Refer to BS 6891 or IGE-UP-1 for further details. Retighten the union .

TESTING FOR GAS SOUNDNESS

Close the gas supply cock at the meter.

Remove the screw in the inlet pressure test point, Frames 23/24, and connect a gas pressure gauge to the test point. Take particular care to ensure a gas-tight connection. Open the gas supply cock at the meter and the appliance gas cock; record the static pressure. Next, close the gas supply cock at the meter. Wait for 1 minute for temperature stabilisation then observe the pressure gauge over a period of 2 minutes.

Any leaks must be cured.

Replace all pressure test point screws.

20 INITIAL LIGHTING

The **CXD** incorporates an advanced microprocessor based control system which operates all electrical functions of the boiler including automatic ignition, flame detection, thermostatic control, and high/low burner operation. In addition, the microprocessor also has onboard commissioning and servicing instructions and a fault diagnosis programme.

The next section describes the minimum procedure to light and commission the boiler. Full operating instructions for the microprocessor control and details of the high/low operation system are included in Frames 27-30.

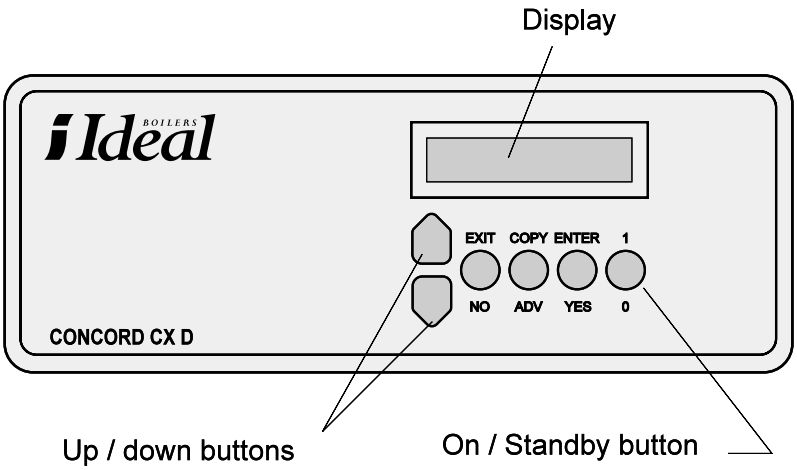

21 LIGHTING INSTRUCTIONS

1. Check that the gas and electricity supplies to the boiler are turned off.
2. Connect a gas pressure gauge to the inlet pressure test point. (Frame 23 or 24).
3. Turn on the gas and electricity supplies. The display will initially show a start-up code followed by;

STANDBY 0

4. Press the [1/0] button The display will change to:

BOILER ON 1

then change every few seconds to indicate the boiler status. The boiler will commence it's ignition sequence.

5. The boiler should light, initially at low rate for a period of approximately 30 sec before proceeding to maximum rate. If the boiler fails to light, allow the controls to cycle until ignition is established. If the boiler fails to light after 5 attempts, the display will show "Detection Fault". In this case, the ignition sequence should be reset by pressing the [COPY] button. Check that the gas inlet pressure is at least the minimum value stated in Table 2 when the boiler is firing at maximum rate (High).
6. Whilst the boiler is warming up, observe the display to become familiar with its operation. The display changes automatically between the:

- Boiler status and flow temperature
- Hours run
- Temp set
- Programmer status
- Enter for menu
- Day
- Date and time

Note. *That as the boiler flow temperature approaches the thermostat setting, the boiler is automatically reduced to low rate.*
This feature is designed to improve overall operating efficiency and reduce short cycling under low load conditions. The controls will automatically switch the boiler between high and low upon demand.

22 CHECKING THE MANIFOLD PRESSURES

Turn the boiler OFF by pressing the [0/1] button and allow the flow temperature to cool to less than 50 ^{0}C.

Connect a pressure gauge to the burner manifold test point (Frame 23 or 24). Press the [0/1] button again to turn the boiler ON.

The boiler will operate at low rate for approximately 3 minutes before proceeding to high rate (this will only happen if the flow temperature is below 55 ^{0}C otherwise the boiler will proceed immediately to high rate).

Observe the burner pressures and compare them to the values given in Table 1. If either pressure differs by more than 10%, reset the pressures by following the procedure in Frames 23 or 24.

23 ADJUSTING THE MANIFOLD PRESSURES

CXD 40, 50 & 60 ONLY

1. Press the [ENTER] button on the fascia panel, then press either the [UP] or [DOWN] arrow button until the display shows:

   COMMISSIONING

   then press [ENTER]. The microprocessor is now in commissioning mode. Failure to enter the Commissioning mode will result in a fault condition being detected when the following actions are carried out.

2. If desired, it is possible to use the onboard commissioning instructions, using the [UP] / [DOWN] arrow buttons. However the following paragraphs provide more detailed instructions and are recommended until the installer is familiar with the **CXD**.

3. It is essential to adjust the maximum setting first.

4. Adjust the system controls to ensure that the boiler will operate at high rate for a reasonable period, then remove the dust cover and adjust the high rate burner pressure setting, using a suitable spanner. Turn the maximum adjuster (7) clockwise to increase, or anticlockwise to decrease, the pressure. After setting to the indicated pressure allow the boiler to operate for about 5 minutes to stabilise then recheck the burner pressure.

5. Press the [0/1] button to turn the appliance off, then disconnect the high/low solenoid connector plug (10) from the gas valve. Turn the appliance on and repeat the above sequence but using the low rate adjustment screw (6) inside the spindle.

6. Turn the appliance off, reconnect the high/low solenoid plug, refit the dust cover over the adjustment screws and refit both pressure test point screws. Check for gas soundness.

7. Press [EXIT] to leave the commissioning mode and return to the main menu.

8. Press [EXIT] again to return to the status displays.

LEGEND

1. Fascia panel display.
2. Overheat thermostat reset button.
3. Main gas inlet cock.
4. Union.
5. Gas control valve.
6. Screw - minimum adjuster.
7. Gas rate adjuster - maximum.
8. Burner setting pressure test point.
9. Inlet pressure test point.
10. High/low solenoid connector.

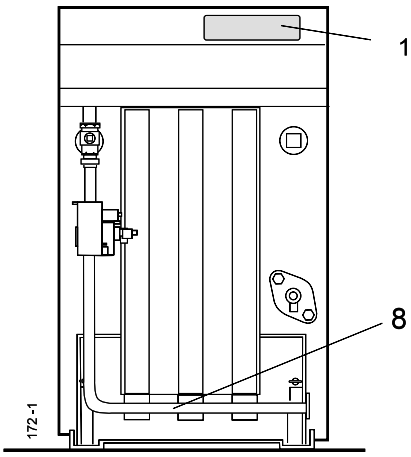

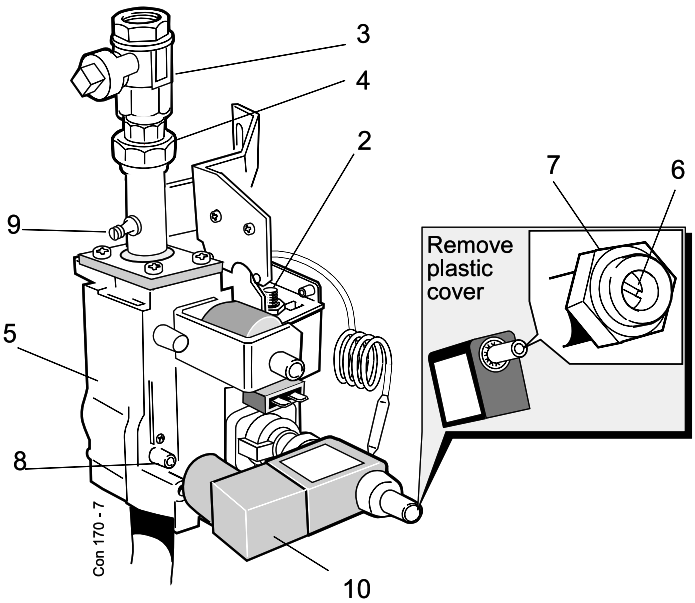

24 ADJUSTING THE MANIFOLD PRESSURES

CXD 70, 80 90 &100 ONLY

1. Press the [ENTER] button on the fascia panel, then press either the up or down arrow button until the display shows:

COMMISSIONING

then press [ENTER]. The microprocessor is now in commissioning mode. Failure to enter the commissioning mode will result in a fault condition being detected when the following actions are carried out.

2. If desired, it is possible to use the onboard commissioning instructions using the up/down arrow buttons. However the following paragraphs provide more detailed instructions and are recommended until the installer is familiar with the **CXD**.

3. It is essential to adjust the LOW setting first.

4. Press the [0/1] button to turn the appliance OFF, then disconnect the power leads from the right hand (HIGH) gas valve.

5. Press the [0/1] button again to light the burner. Allow the burner to run at low rate for several minutes, then check that the low burner pressure is as shown in Table 1 for the appropriate boiler size. If necessary, adjust the low burner pressure adjusting screw (7).

6. Press the [0/1] button to turn the boiler off, reconnect the power leads to the RH valve and press the [0/1] button again to relight the boiler. Adjust the system controls to allow the boiler to fire at high rate for several minutes, then remove the dust cover and adjust the high burner pressure adjusting screw (8). After setting to the indicated pressure replace the dust cover and allow the boiler to operate for about 5 minutes to stabilise then re-check the burner pressure.
Note. *If high rate pressure is not achievable as above check that the gas restrictor in the low-rate valve is fitted (see Frames 38 & 41).*

7. Press the [0/1] button to turn the boiler off, then refit both pressure test point screws. Check for gas soundness.

8. Press [EXIT] to leave the commissioning mode and return to the main menu.

9. Press [EXIT] again to return to the status displays.

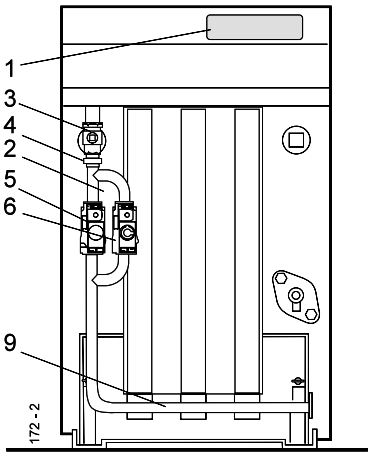

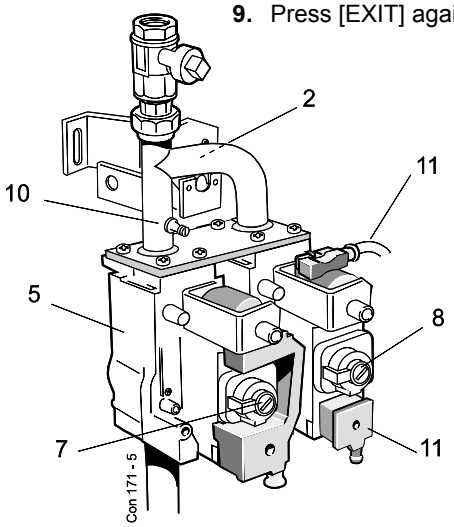

LEGEND

1. Fascia panel display.
2. Overheat thermostat reset button.
3. Main gas inlet cock.
4. Union.
5. Gas control valve low rate.
6. Gas control valve high rate.
7. Low rate adjusting screw.
8. High rate adjusting screw.
9. Burner setting pressure test point.
10. Inlet pressure test point.
11. RH (High) gas valve power connector.

25 OPERATING INSTRUCTIONS

The **CXD** features direct burner ignition, high/low burner operation, and a microprocessor control system.

Upon a demand for heat, the controls open the low rate gas valve and provides a rapid spark at the ignition electrode for up to 10 seconds.

The burner will light and remain at low rate for approximately 3 minutes before proceeding to high rate (when the microprocessor opens the remaining gas valve).

If the boiler fails to light, the gas valve is closed and there will be a delay of 1 minute before the cycle is repeated. If, after 5 attempts the burner has failed to light, the boiler will go to lockout and

DETECTION FAULT

will be displayed on the screen.

When the boiler flow temperature reaches the thermostat set point, the controls will turn the burner to low rate. If the flow temperature continues to rise the burner will be turned off at 3 °C above the set point.

If however the temperature falls below the set point whilst on low fire, the controls will automatically turn the burner back up to maximum rate.

This system has the advantages of ensuring that the boiler accurately maintains the set temperature (without the large temperature swings that can be associated with on/off boilers), prevents rapid or short cycling, and provides more efficient system operation.

26 ADDITIONAL FEATURES OF THE CONTROL SYSTEM

In addition to the operational characteristics described above, the control system incorporates the following features accessible to the user or service engineer:

ADJUSTABLE BOILER TEMPERATURE CONTROL

This is factory pre-set at 82 ^{0}C but may be adjusted by the user between 60 ^{0}C and 85 ^{0}C. Refer to Frame 30.

PROGRAMMER TIMER

A maximum of 3 time periods per day can be programmed in to the boiler.

Note. *This a boiler timer only and does not replace a conventional system programmer serving more than one heating zone.*

OUTSIDE SENSOR (Optional extra)

If the optional outside sensor is fitted, the control system will recognise this and automatically regulate the boiler flow temperature with respect to changes in the external temperature. If the sensor is fitted, an extra status information screen will appear stating whether the device has been activated or not (i.e. compensator on/off).

COMMISSIONING INSTRUCTIONS

These are provided to assist the installer to commission the boiler.

SERVICING INSTRUCTIONS

These are provided to assist the service engineer.

FAULT DIAGNOSIS

In the unlikely event of a fault condition, the microprocessors will identify the fault area and display a suitable message on the display.

Further to these accessible features there are other features present in the system which the installer/service engineer should be aware of.

HOURS RUN LOG

This feature enables the installer to determine the workload of the boiler.

PUMP OVERRUN

If the flow temperature is above 75 ^{o}C at the time of boiler shutdown, the controls will maintain pump operation until the residual heat within the appliance has been dispersed and the flow temp is below 75 ^{o}C.

ANTI-CYCLE DEVICE

On any heating system, if the heating load is very low, there is a tendency for the boiler to cycle on and off rapidly. This is inefficient and can lead to shortened boiler life. The high/low operating system of the **CXD** minimises the risk of this but, in addition, the controls prevent the boiler from short cycling by preventing subsequent ignition within a period of 2 minutes. When active, the display will show:

ANTICYCLE (flow temp)

27 DESCRIPTION AND OPERATION OF BOILER CONTROLS

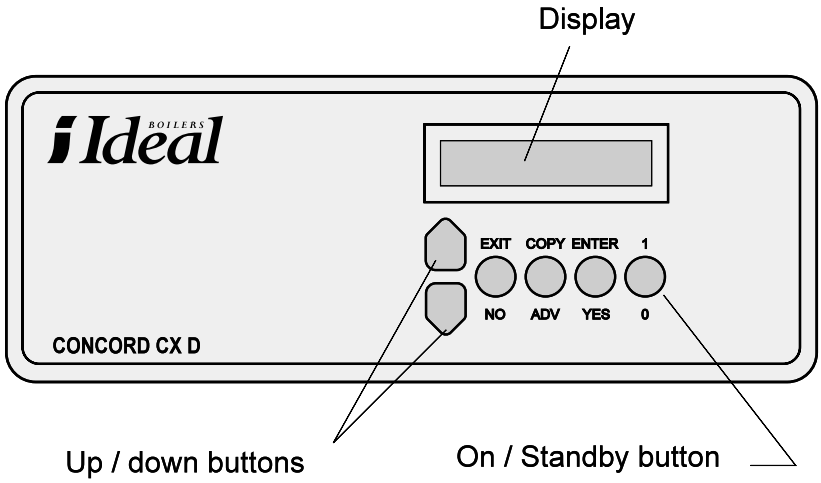

ON / STANDBY [1/0] BUTTON

Turns the boiler on and to STANDBY.

WARNING.
*STANDBY does **NOT** electrically isolate the boiler.*

When this switch is in the STANDBY position the display will show :-

STANDBY 0

On initial start up the boiler will indicate the hardware and software code, the boiler type and indicate if the boiler is ON or STANDBY. If the boiler is at STANDBY the rotating information screens will not be in evidence.

To switch the boiler on press the On/Standby [1/0] button. The display will show :-

BOILER ON 1

This display will be retained for five seconds before the information screens are displayed.

INFORMATION SCREENS

If the optional outside temperature kit, enabling weather compensation, has been fitted the display will indicate the compensated set point temperature.

An example of the display is as follows :-

MONDAY
14 : 10 19 / 09 / 95
ON HIGH 50 °C
HOURS RUN 250
TEMP SET 82 °C
PROGRAMMER ON
"ENTER" FOR MENU

28 DESCRIPTION AND OPERATION OF BOILER CONTROLS - continued

The diagram below shows the sequence of steps to be taken when reading the instructions on the following pages.

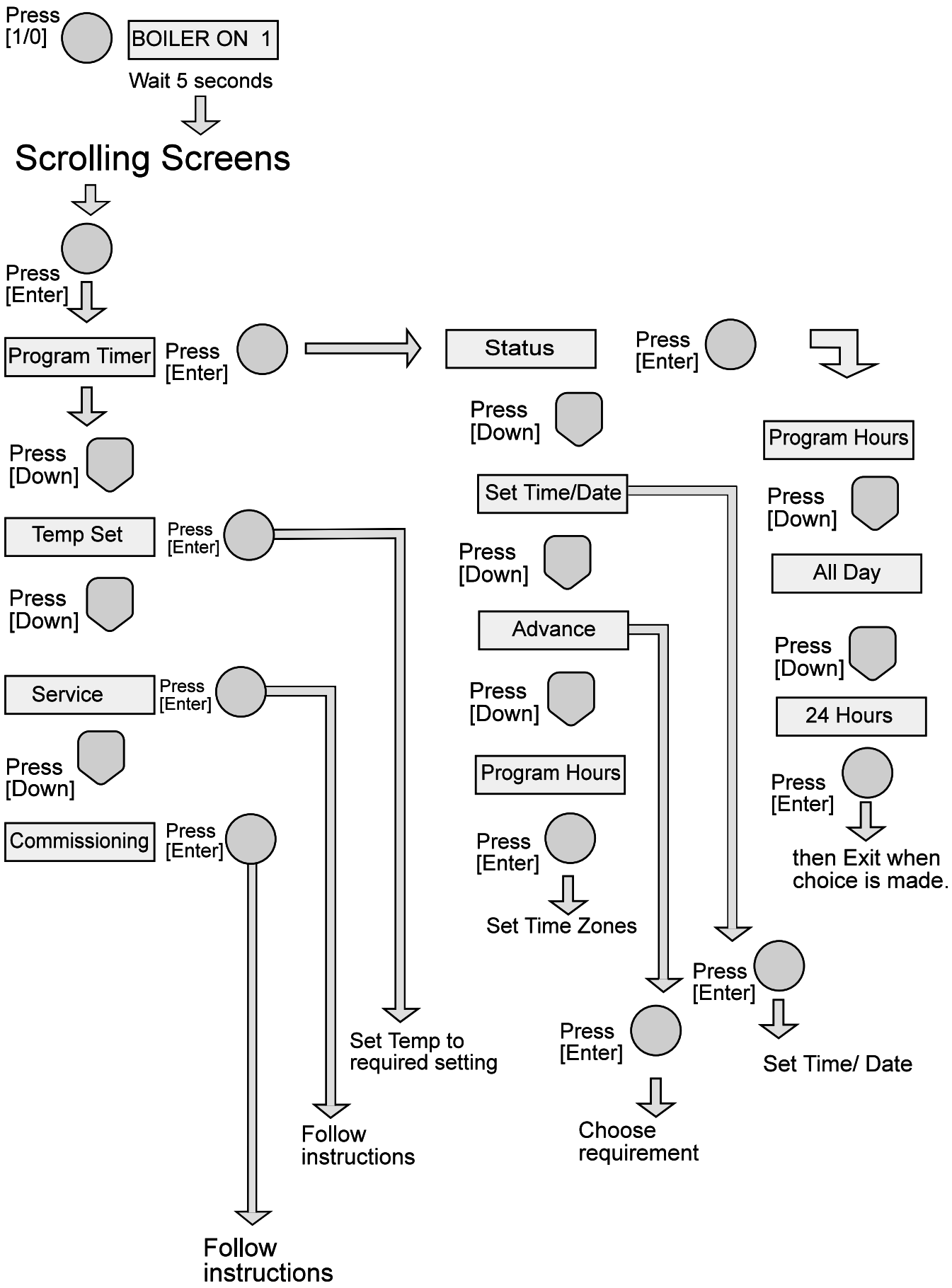

29 DESCRIPTION AND OPERATION OF BOILER CONTROLS - continued

MENU

To access the menu screen ensure that the information screens are being displayed.
Any key, except the [1/0] button, may now be pressed to access this feature but, as indicated on the information screen, the [ENTER] button is the preferred means.

On entering this option the first screen displayed will be:-

PROGRAM TIMER

The [DOWN] button can be pressed consecutively to access the features required, which are as follows:-

TEMP SET

SERVICE

COMMISSIONING

If the weather compensation option is fitted then a further screen will be displayed after commissioning.

The [UP] button will access the above options in reverse. When the option required is displayed and the [ENTER] button pressed another set of menus will be available as discussed on the following pages.

PROGRAMMER TIMER

The programmer has 3 time zones per day for each day of the week. Each day can be programmed for the requirements of that day, giving 7 programmed days, or, using the copy facility, any number of days can be the same. If a particular time zone is not required then the ON and OFF periods should be programmed for the same time.

Each button has an auto repeat function.

The programmer is based on a 24 hour clock and the boiler comes with a backup programme set for :-

All Day

The boiler will respond to this programme unless an alternative is programmed in.

Using the [UP] or [DOWN] button select the "Programmer Timer" from the menu and press [ENTER]. The following menus will be available using the [UP] or [DOWN] buttons:-

STATUS

or SET TIME/DATE

or ADVANCE

or PROGRAM HOURS

To select any of the above use the [UP] or [DOWN] button until the option required is displayed and press [ENTER].

STATUS

Enables the selection of programme hours, all day usage or 24 hour.

If the "Programme Hours" option is selected the boiler will go on and off subject to the times programmed.

If ALL DAY usage is selected the boiler will come on at the first "ON" period selected and off on the last "OFF" period selected, ignoring all other time settings. Based on the above backup programme this means the boiler would run, subject to any other external controls, from 07:30 to 22:00 hours.

If 24 HOUR is selected the programme times will be ignored and the boiler will run subject to the external controls until one of the other options is again selected.

SET TIME/DATE

Enables the correct time and date to be entered.

The display will show a flashing day of the week as follows :-

TUESDAY

The correct day can be selected by use of the [UP] or [Down] button and when correct the [ENTER] button should be pressed. The time and date will now be displayed as follows:-

10 :57 20/09/95

with first two digits, the hours, flashing.

By use of the [UP] or [Down] button the correct hour is selected and the [ENTER] button pressed. The minutes will now be flashing and, by use of the [UP] or [DOWN] button, the correct minutes selected and the [ENTER] button pressed.

This method is repeated until the correct day, month and year are selected. On selecting the correct year and pressing [ENTER] the hours will flash then, if all the data is correct, the [EXIT] button should be pressed for the control to accept this information.

ADVANCE

Enables the programme to be advanced by 1 hour.

The following display will be available:-

ADVANCE 1HR Y/N?

If the [YES] button is pressed and the programmer is in an OFF period the boiler will be brought on for 1 hour, subject to external controls. If the boiler is on with less than 1 hour to a programmed off period then the difference between this time and 1 hour is the time of the extended on period. If the boiler is in the 24 hour mode then this option will have no effect.

If this advance has been selected, to cancel it then the same

30 DESCRIPTION AND OPERATION OF BOILER CONTROLS - continued

procedure should be followed but the [NO] button pressed.

PROGRAMME HOURS

Enables a user-timed programme to be entered.

The following display will be available:-

MON 1 ON 06 : 30

with the hours, 06, flashing

Using the [UP] or [DOWN] button select the correct hour and press [ENTER]. The *minutes* will now flash and the correct minutes should be selected, using the [UP] or [DOWN] button followed by pressing [ENTER]. This will cause the hours to flash and if the correct ON time has been entered the [EXIT] button should be pressed. The display will now show the OFF for time zone one.

This procedure should be repeated for all 3 time zones for Monday.

After the last [EXIT] the display will ask if this day's programmes require to be copied to Tuesday. If the [YES] button is pressed Tuesday's programme will be the same as Monday. This action can be repeated for all the days or as many as required,

If the [NO] button is pressed then all 3 time slots will need to be programmed with the required times.

TEMPERATURE SET POINT

Enables the temperature at which the boiler is required to operate to be set. It has a range of 60 ^{0}C - 85 ^{0}C.

Using the [UP] or [Down] button select the TEMP SET from the menu and press [ENTER]. The following will be displayed:-

TEMP SET 82

with the temperature flashing

The [UP] and [Down] button should be pressed until the correct temperature is selected and then the [ENTER] button should be pressed; the temperature selected will become stationary. Pressing the [EXIT] button will ensure that the control accepts the new setting and return to the menu.

High / Low Operation
In the example above, when the boiler flow temperature is equal to 82 ^{0}C the high rate gas valve will close, allowing the boiler to run at low rate. When the flow temperature exceeds the set temperature by 3 ^{0}C, in the example above 85 ^{0}C, the low rate gas valve will close and the boiler will be off. The information screen will display

STANDBY.....85. C

The boiler will remain OFF for a minimum of 3 minutes or until the boiler flow temperature has dropped by 3 ^{0}C, whichever is the greater time.

If the boiler load is such that it cycles between high and low operation the boiler will fall through 3^0 before the high rate gas valve is energised.

Delayed High Rate Gas valve Operation
When the boiler is started from cold the high rate gas valve will be delayed for 3 minutes and then energised. If the boiler flow temperature is equal to or greater than 55 ^{0}C then this delay will NOT occur.

Notes.

1. *If a fault occurs with the boiler thermostat the fault display screen will show "C/H Sensor Fault".*
2. *When the low rate gas valve is de-energised as the temperature required has been obtained the boiler will go into an anti-cycle route for 2 minutes. The display will indicate anti-cycle and the current flow temperature.*

SERVICING

The SERVICE option is intended as a memory aid to the more comprehensive servicing instructions to be found in this manual.

Using the [UP] or [Down] button select SERVICE from the menu and press [ENTER]. The following display will be available:-

REFER TO SERVICE

GUIDE ON DOOR

The 2 screens will alternate to display this whole message. When using this option, arrow keys will be in evidence to indicate if the UP or DOWN buttons should be used. *It is IMPORTANT that these instructions are carried out precisely and in the order displayed.*

COMMISSIONING

The "Commissioning" option is intended as a memory aid to the more comprehensive commissioning instructions to be found in this manual.

Using the [UP] or [Down] button select "Commissioning" from the menu and press [ENTER]. The following display will be available:-

REFER TO SERVICE

GUIDE ON DOOR

The 2 screens will alternate to display this whole message.

When using this option arrow keys will be in evidence to indicate if the [UP] or [DOWN] buttons should be used. *It is IMPORTANT that these instructions are carried out precisely and in the order displayed.*

FAULT DIAGNOSIS

In the unlikely event of a fault condition, the microprocessors will identify the fault area and display a message indicating the nature of the fault to assist a speedy and effective repair.

See "Fault Finding" section for more details.

31 SPILLAGE CHECK

Check there is no spillage of combustion products from the boiler draught diverter by carrying out a spillage test, as detailed in BS. 5440:1.

32 TESTING

Check that the main burner responds correctly to manual on/off operations of any controls fitted in the gas control circuit.

Check, in the following manner, the operation of the flame failure safety device.

1. Extinguish the main burner by turning off the main gas inlet cock. Refer to Frames 23 & 24.
2. Check that the display shows [DETECTION LOCKOUT].
3. Turn on the gas cock and reset by pressing [COPY].
4. Fit the lower casing front panel.
5. **Important Commissioning / Operating Instructions:** *Do not operate this appliance for long periods or take any combustion readings with the casing or any part of the casing removed.*

33 ADJUSTMENT OF WATER FLOW RATE THROUGH THE BOILER

When commissioning the heating/domestic hot water system the shunt pump must be adjusted to give the minimum flow rate given in Table 3, when that part of the system intended to be used for dissipation of residual heat only is in operation.

34 HANDING OVER

ROUTINE OPERATION

Full instructions covering routine lighting and operation of the boiler are given on the Lighting and Operation Instruction Label located on the inside of the casing door.

Draw the attention of the boiler owner or his representative to the Lighting and Operating Instruction Label on the inside of the casing door. Give a practical demonstration of the lighting and shutting down of the boiler.

Describe the function of the boiler and system controls and show how they are adjusted and used.

Describe the function of the downdraught thermostat if fitted.

Hand over these and the User's Instructions to the customer and request him to keep them in a safe place for ready reference.

IMPORTANT. Point out to the owner that the boiler must have regular maintenance and cleaning, at least annually, in order to ensure reliable and efficient operation. Regular attention will also prolong the life of the boiler and should preferably be performed at the end of the heating season.

Recommend that a contract for this work should be made with a Corgi registered engineer.

35 SERVICING

Caradon Plumbing Limited does not accept any liability resulting from the use of unauthorised parts or the repair and servicing of appliances not carried out in accordance with the Company's recommendations and specifications.

A comprehensive service should be carried out at least once a year. The User is advised to make a contract with a Corgi registered engineer.

WARNING. ALWAYS turn *OFF* the gas supply at the gas cock and switch *OFF* and disconnect the electricity supply to the appliance BEFORE SERVICING OR REPLACING ANY COMPONENTS.

CLEANING THE BOILER

Pull and lift off the lower front panel and top panel from the boiler casing.

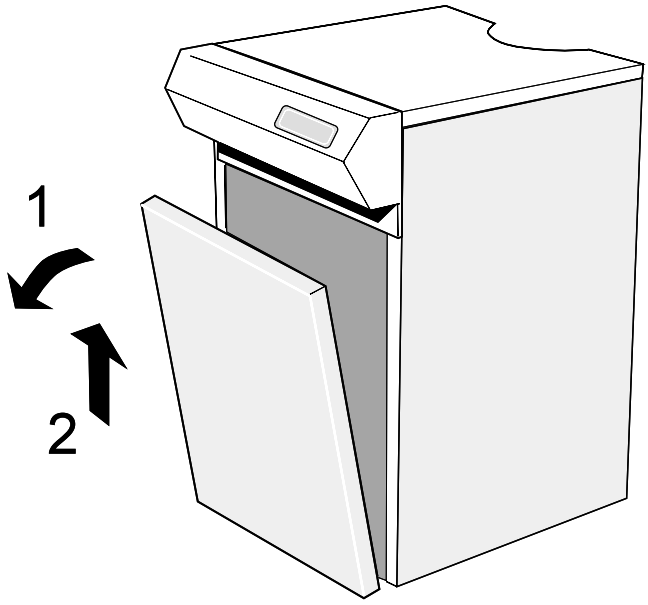

36 SERVICING - continued

Unscrew the extended nuts at the top of the NOx duct behind the control box and lift the NOx duct clear of the burners as illustrated below.

Undo the wing nuts securing the burner front plate. Pull the front plate forwards, at the top, and lift it out, *taking care not to damage the insulation or the detection electrode*.

On the **CXD 40, 50 & 60** remove the screws holding the HT heat shield from the LH leg of the combustion chamber. Raise slightly and withdraw the heat shield, *taking care not to damage the leads.*

The burners may be lifted out after they have been pushed back to clear the injectors. Take care not to damage the ignition electrode assembly and carefully detach the ignition leads when removing the left hand burner. Take care not to damage the detection electrode when removing the RH burner.

Undo the screws securing the cleanout cover and lift it off to give access to the flueways. Lift out the flue baffles.

Remove all loose deposits from the heat exchanger (especially from between the fins), using the brush provided, and remove all debris from the combustion chamber floor.

Examine the burner assembly. Clean the burner bars by brushing them down with a stiff bristle (not wire) brush. Check each bar carefully to ensure that all flame ports are clear, that there are no cracks and that all surfaces are free from accumulated deposits.

If available, an industrial vacuum cleaner may be useful to assist in this work. When cleaning the burner bars, take care to avoid damage from rough handling to the ignition or detection electrodes.

Inspect the ignition and detection electrodes.

Ensure that they are clean and in good condition.
In particular, check that:

1. The ignition electrode shield and base fixing screws are tight.
2. The electrodes are correctly positioned. Refer to Frames 40 or 41.
3. Reassemble in reverse order. Refit the flue baffles, cleanout cover, NOx duct, and casing panels.

TESTING AFTER SERVICING

After re-assembly, restore the electricity and gas supplies. Light the boiler. Refer to the Lighting Instructions and also Frame 19 'Testing for Gas Soundness' .

Check burner manifold pressures (Frame 22) and adjust if necessary (Frames 23 or 24).

Finally, reset any external controls to the desired position.

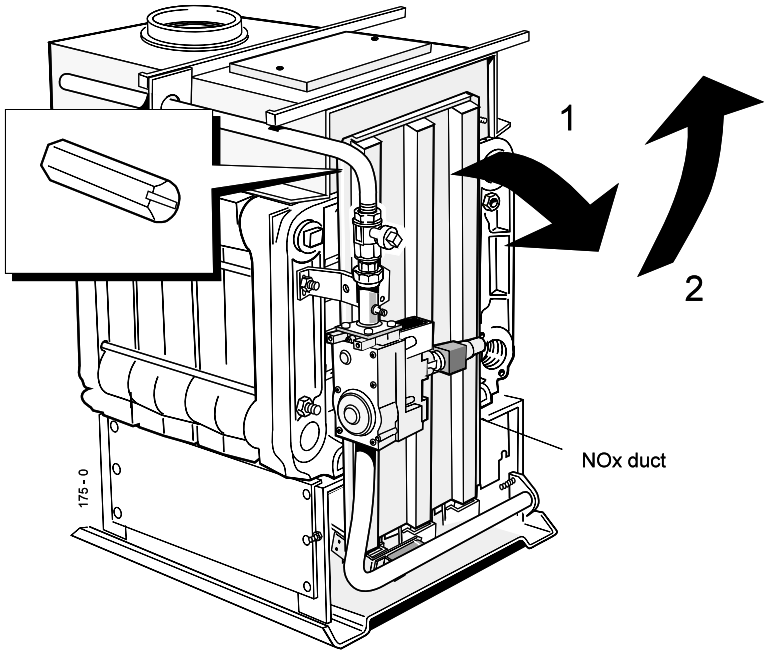

37 REPLACEMENT OF COMPONENTS - Refer to Frames 5, 40, 41 and 42.

GENERAL

WARNING

ALWAYS turn OFF the gas supply at the gas inlet cock and DISCONNECT the electricity supply BEFORE WORKING on the APPLIANCE.

To facilitate the replacement of components, remove and replace the lower front panel, NOx duct and the burner front plate as necessary - described under 'Servicing'.

38 GAS CONTROL VALVE

1. Disconnect the electrical connections to the faulty gas valve.
2. Check that the gas inlet cock is OFF, unscrew the 4 screws on the gas valve inlet flange, the 4 screws on the outlet flange and remove the valve.
3. If the valve has a brass restrictor fitted to its outlet, remove by unscrewing and refit into the new valve. It is imperative that the gas restrictor is fitted to the low-rate valve.
4. Replace the gas control valve and re-assemble in reverse order, ensuring that the arrow indicating the direction of flow is in the correct position.
5. Ensure that new 'O' ring seals are correctly placed in each flange connection.
6. Test for gas soundness.
7. Recommission the appliance and set the manifold pressures as described in Frames 22 and 23 or 24.

39 MAIN BURNER

1. Remove the NOx duct and burner front plate, as previously described in Frame 35.
2. On the **CXD 40, 50 & 60** remove the screws holding the HT heat shield from the LH leg of the combustion chamber. Raise slightly and withdraw the heat shield, taking care not to damage the leads.
3. Each burner can be removed by sliding back, to clear the injector, then lifting out. Disconnect the ignition leads from the LH burner and the detection lead from the RH burner.
4. Remove the 2 screws securing the electrode assembly and heat shield to the LH burner bracket and the 2 screws securing the detection electrode bracket to the RH burner.
5. Reassemble in reverse order.

IMPORTANT. Care must be taken to prevent damage to the combustion chamber insulation when replacing burners.

40 BURNER AND CONTROLS ASSEMBLY - Exploded View - CXD 40-60

LEGEND

1. Main gas inlet cock.
2. Gas inlet union.
3. Gas control valve.
4. 'O' ring seal.
5. Spark generator.
6. Burner manifold.
7. Main injector, 3 off.
8. Main burner (centre/RH), 2 off.
9. Main burner (LH), 1 off.
10. Ignition electrodes.
11. Overheat thermostat generator mounting bracket.
12. Overheat thermostat.
13. Detection electrode assembly.
14. HT leads heat shield.
15. Gas pipe.

PTP Pressure test point.

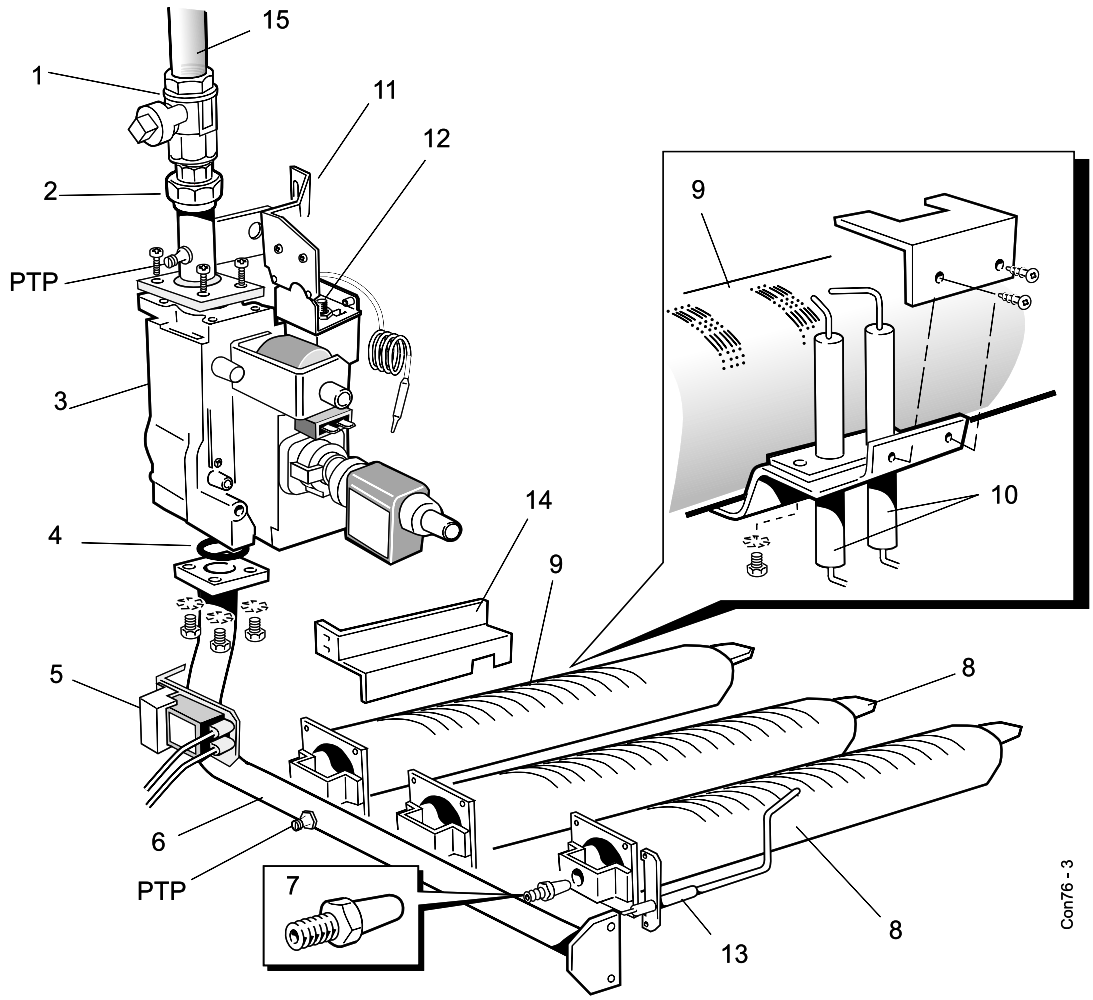

41 BURNER AND CONTROLS ASSEMBLY - Exploded View - CXD 70-100

LEGEND

1. Main gas inlet cock.
2. Gas inlet union.
3. 'O' ring seal.
4. Gas control valve, Low.
5. Gas control valve, High.
6. Spark generator.
7. Burner manifold.
8. Main injector, 3 off.
9. Main (centre/RH) burner, 2 off.
10. Main (LH) burner, 1 off.
11. Ignition electrodes.
12. Overheat thermostat mounting bracket.
13. Overheat thermostat.
14. Detection electrode assembly.
15. Gas pipe.
16. Gas restrictor
PTP Pressure test point

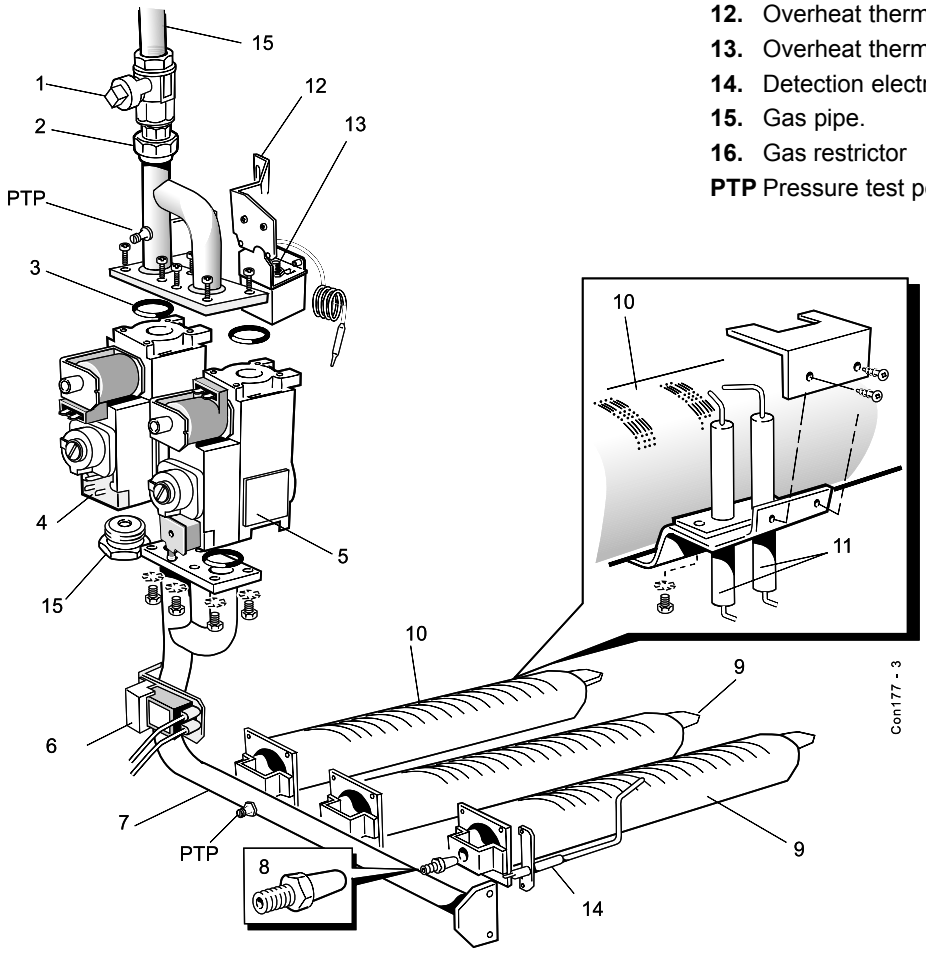

42 OVERHEAT THERMOSTAT

1. Undo the 2 screws retaining the overheat thermostat assembly and withdraw the assembly.
2. Undo the 2 screws securing the thermostat cover to the support bracket and withdraw the thermostat from the cover.
3. Remove the push on tags from the thermostat body noting their positions.
4. Trace the thermostat capillary to the thermostat pocket remove the split pin from the thermostat pocket and lift out the thermostat phial.
5. Undo the single nut securing the thermostat to the bracket.
6. Fit the new thermostat in reverse order (ensuring that the capillary is located in the notch provided in the support bracket). Reconnect the push on tags to terminals 1, 2 and ⏚ on the overheat thermostat body.

Ensure that the phial is secured with the split pin in the pocket on the rear section and the capillary is rerouted along the side casing in the clips provided.

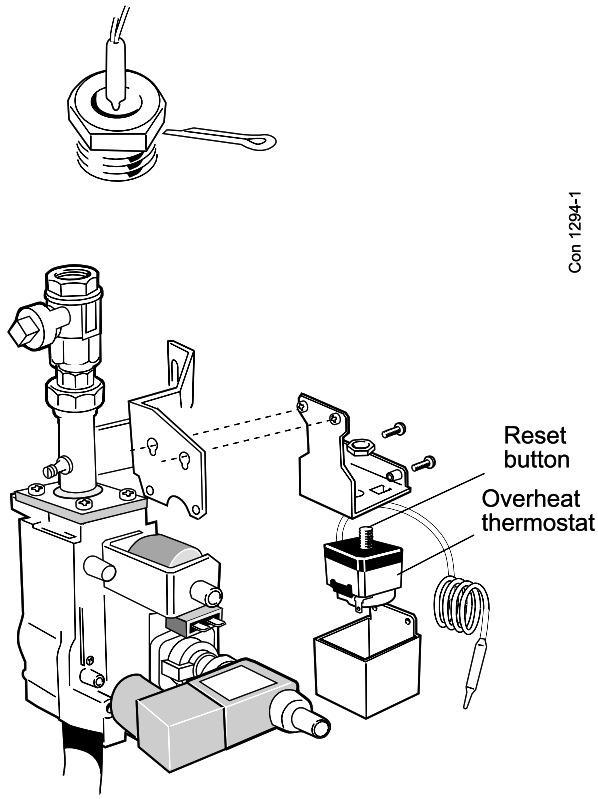

43 CONTROL BOX - Basic Boiler, Exploded View

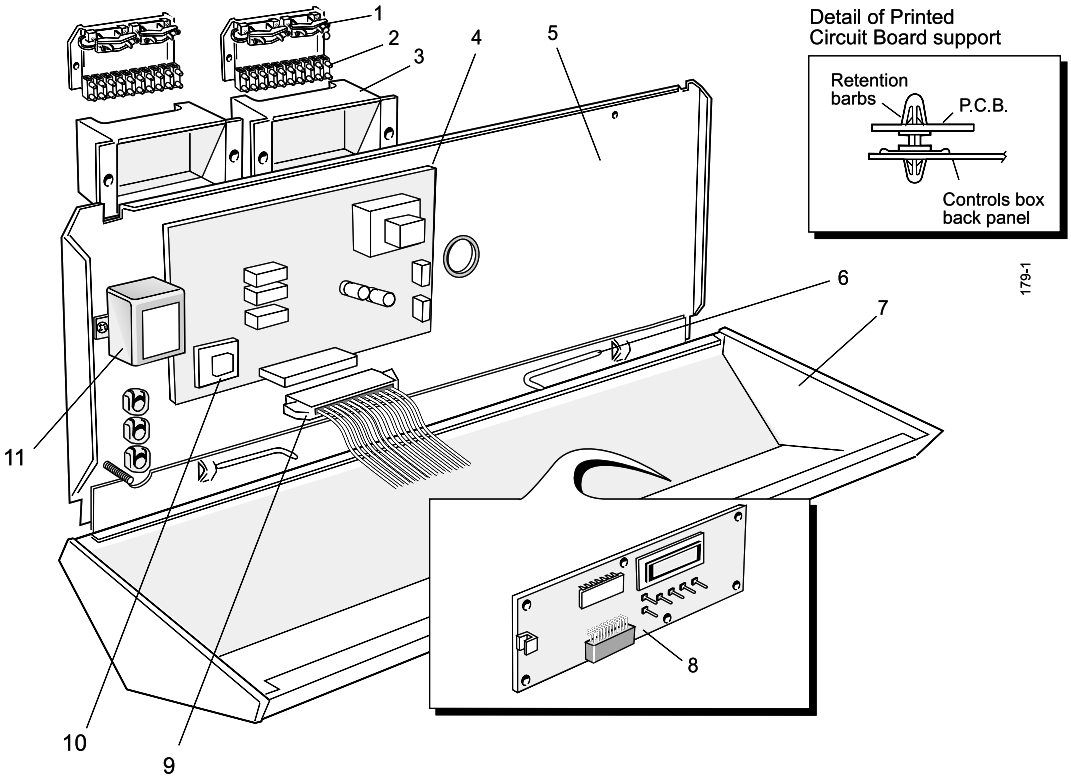

LEGEND

1. Wiring clamp.
2. Connection box plug.
3. Connection box.
4. Printed circuit board 'No. 34'.
5. Back panel.
6. Hinge pin.
7. Controls box.
8. Printed circuit board 'No. 35'.
9. Ribbon cable.
10. Printed circuit board No. RTC/34.
11. EMC Filter
12. Controls box fascia (not shown).

44 CONTROL SENSOR

1. Remove the casing top panel.
2. Remove the sensor from the thermostat pocket in the rear heat exchanger section by removing the Heyco bush.
3. Trace the lead back to the connector box behind the control box. Release the connector box plug (Frame 43).
4. Replace the sensor and reassemble in reverse order. Ensure that the lead is rerouted along the casing in the clips provided, and check that the sensor is correctly fitted and secured in the thermostat pocket.

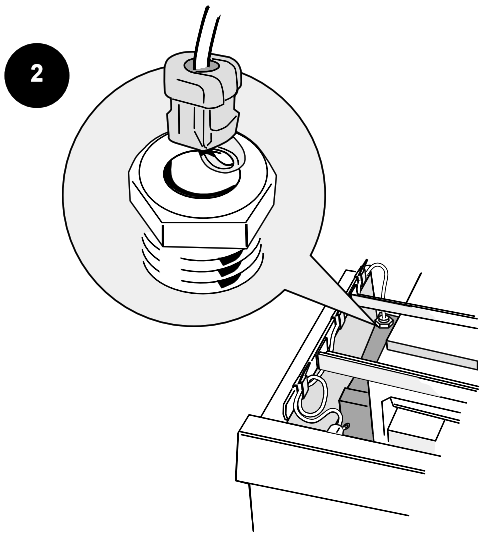

45 PC BOARD 'NO. 34'

1. Remove the lower front panel.
2. Slacken the 2 screws securing the control box front panel. Carefully lift it up and hinge forwards.
3. Release the ribbon cable from PCB No. 34 by pushing the retaining tabs sideways.
4. Release all plug connections from the board.
5. Remove the real time clock board (PCB No. RTC/34) from PCB No. 34 by squeezing the 4 mounting pins and pulling forwards.
6. Release PCB No. 34 from the 9 plastic mounting pins and replace the board.
7. Re-assemble in reverse order.

46 PC BOARD NO. 35

1. Remove the lower front panel.
2. Slacken the 2 screws securing the control box front panel.
   Carefully lift it up and hinge forwards.
3. Release the ribbon cable plug from PCB No. 35.
4. Release PCB No.35 from the 6 plastic mounting pins and replace the board.
5. Re-assemble in reverse order.

47 PC BOARD NO. RTC/34

1. Remove the lower front panel.
2. Slacken the 2 screws securing the control box front panel.
   Carefully lift it up and hinge forwards.
3. Remove the real time clock board (PCB No. RTC/34) from PCB No. 34 by squeezing the 4 mounting pins and pulling forwards.
4. Re-assemble in reverse order.

48 COMBUSTION CHAMBER INSULATION REPLACEMENT

The insulation boards used in the combustion chambers of these products contain man-made fibres, refractory fillers, organic and inorganic binders and as such are deemed to be harmless to humans.

Caradon Plumbing Limited, however, recommend that for your own comfort and to comply with good working practise the procedure described below is followed.

IMPORTANT. Turn OFF the gas and **DISCONNECT** the electricity supply.

To replace the insulation boards the major boiler components (including the heat exchanger and burners) have to be removed to gain access to the combustion chamber.

Prior to removal of the boards the following protective equipment should be worn:

- Face mask supplied with the spare part.
- Gloves supplied with the spare part.

1 Damp down the combustion chamber area containing the insulation boards.

2. Remove the insulation boards. The replacement boards are supplied in a plastic bag. This bag should be retained and the discarded boards should now be placed into it.

3. Sweep any dampened particles and place in the plastic bag.

4. Fit new insulation boards.

5. Remove the gloves and face mask and place them in the plastic bag.

6. Wash your hands and any areas of skin which may have come into contact with any of the particles from the insulation board.

7. Seal the plastic bag and dispose of it and its contents into a commercial tip.

49 INSTRUCTIONS FOR SITE ASSEMBLED BOILERS

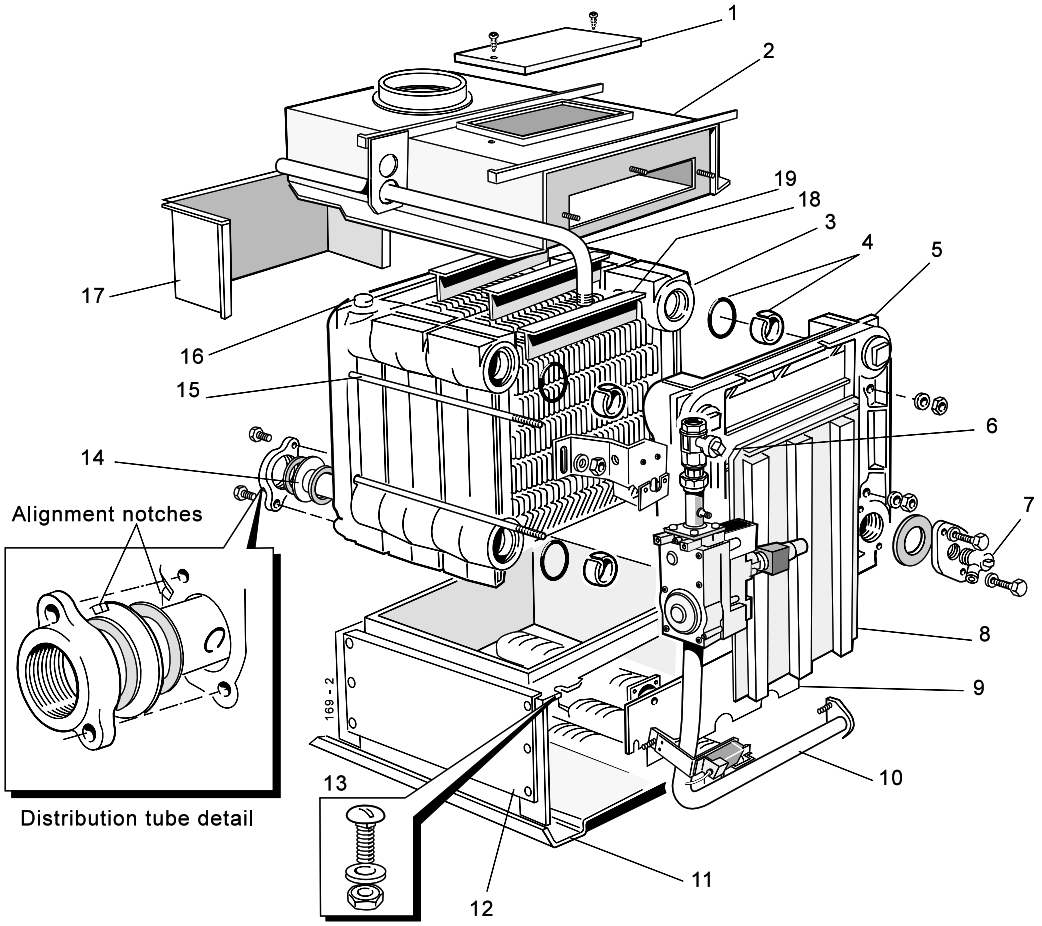

Legend

1. Cleanout cover.
2. Collector hood.
3. Middle section.
4. Section alignment rings & 'O' rings.
5. End section.
6. Gas cock.
7. Drain cock.
8. NOx duct.
9. Front plate.
10. Burner manifold assy.
11. Base plate.
12. Combustion chamber.
13. Section bolt.
14. Distribution tube.
15. Tie rods.
16. Thermostat pocket.
17. Spillage skirt.
18. Flueway baffles.
19. Gas pipe.

The site assembled boiler is supplied in the following packages:

- Combustion chamber / manifold / burner assembly.
- Platework package.
- Jacket package.
- Controls box package.
- End and centre sections.

GENERAL

The installation of the boiler must be in accordance with the Gas Safety (Installation and Use) Regulations 1994 (as amended), building regulations, I.E.E. (BS.7671) regulations and the bye-laws of the local water undertaking. It should also be in accordance with the relevant British Standard Codes of Practice together with any relevant requirements of the local gas supplier and local authority.

TOOLS REQUIRED

- Spanners
- Torque wrench
- Pozi screwdriver
- Mallet

ASSEMBLY

The combustion chamber should be positioned as near as possible to the installation site.

IMPORTANT. It must be remembered that the boiler distribution tube has to be fitted into the rear return tapping of the assembled boiler before siting.

Prior to assembling the sections it will be necessary to remove the burner and controls assembly from the combustion chamber.

Remove the assembly as follows:

1. Undo the 4 wing nuts securing the burner front plate. Pull the front plate forwards from the top and lift it out.
2. On the **CXD 40,50 & 60** remove the screws holding the HT heat shield from the LH leg of the combustion chamber. Raise slightly and withdraw the heat shield taking care not to damage the leads.
3. The burners may now be lifted out after they have been pushed back to clear the injector.
4. Disconnect the electrode leads and take care not to damage the electrode assemblies.
5. Undo the nut securing the manifold assembly to the combustion chamber, pull the manifold assembly to the right and lift out.

50 INSTRUCTIONS FOR SITE ASSEMBLED BOILERS - continued

PREPARATION OF SECTIONS

Each section should be brushed clean on all external surfaces and any debris which may have accumulated within the section should be removed via the bottom ports.

Section assembly - Refer to exploded view

6. Take the back section (with 1/2" BSP. tappings in the top) and lift it onto the combustion chamber so that the combustion chamber back panel return is inside the section rear lip. Locate a slotted steel ring and an 'O' ring seal into each of the 4 ports. It will be necessary to squeeze the steel ring slightly to enable it to be pushed fully into the recess.

7. Lift a middle section onto the combustion chamber and carefully offer it up to the back section until it engages the projecting steel rings. It may be necessary to use a mallet and hardwood block to ensure that the steel rings are pushed fully into the recesses and that the sections are butted up to each other.

Note. *Until the final section is fitted and the tie rods fastened, the sections in the assembly are not fixed together therefore CARE MUST BE TAKEN TO PREVENT the installed section coming apart.*

8. Repeat the above procedure for all of the remaining sections until the assembly is complete.

9. Fit the 4 tie rods through the holes in the sides of the end sections and fit a flat steel washer, a shakeproof washer and a nut to both ends of each tie rod. Screw up all the nuts equally, in turn, and finally tighten them to a torque of 38-41 Nm (28-30 lb ft).

10. Fit the distributor tube assembly as described in Frame 8. Fit the drain cock (refer to exploded view, Frame 49).

11. On open vented systems a hydraulic test should be carried out at 1 1/2 times the design pressure given in Table 2 for a period of 30 minutes.

12. On a pressurised system the test should be at twice the design pressure for a period of 30 minutes.

13. Fit the 4 coach bolts into the lugs at the bottom of the front and rear sections. Secure with the nuts and washers provided.

14. Fit the flue baffles which are located between the fins.

15. Fit the collector hood. Ensure the underside returns running across the hood sit within the front and rear section flueways. Fasten down using the four M6 screws and nuts provided, through the front and rear fixing points.

16. Locate the fibreglass rope in rear section grooves to form a seal with the spillage skirts. Fit the spillage skirts onto the collector hood using the self tapping screws provided.

17. Refit the manifold assembly. Position the boiler insulation over the gas line tie bracket. Fasten the bolt securing the bracket to the front section before wrapping and securing insulation around the boiler body.

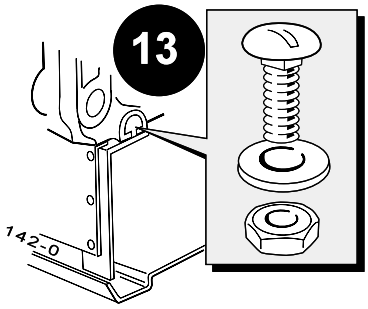

18. Insert the burner rear supports into the slots at the back of the combustion chamber. Lift the front of the burners over the injectors and pull forward to engage.

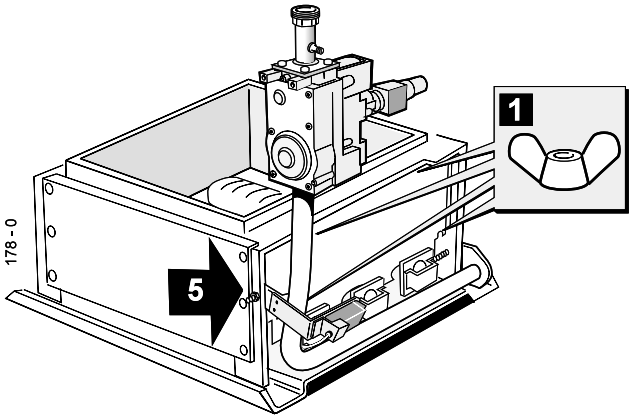

19. Fit the support angles (contained in the platework package) to the collector hood. The angle with the hole for the earth screw fits to the front.

20. Fit the gas inlet pipe bracket to the rear support angle on the LH side using the self tapping screws.

21. Fit the gas inlet pipe and make good the union between the gas cock and the valve inlet pipe.

22. Fit the Nox duct using the reverse procedure to that shown in Frame 36 and secure with the extended nuts.

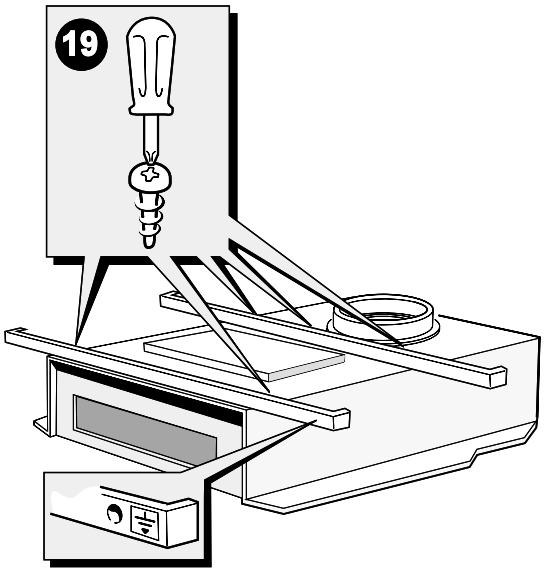

23. The boiler is now ready for installation. Go to Frame 8 in this publication and continue the installation from there.

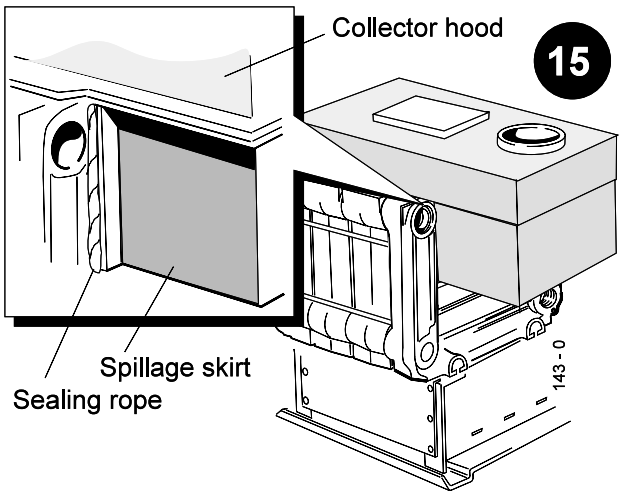

51 BOILER CONTROL

WARNING.
*The ON/STANDBY [1/0] button does **NOT** electrically isolate the boiler.*

Before attempting any electrical fault finding ALWAYS carry out the preliminary electrical system checks as detailed in the Instructions for the British Gas Multimeter or other similar commercially available meter.

The preliminary electrical system checks are the FIRST electrical checks to be carried out during a fault finding procedure.

On completion of any service/fault finding task which has required the breaking and remaking of electrical connections the following checks MUST be repeated:

a. Earth continuity

b. Polarity

c. Resistance to earth

Detailed instructions on the replacement of faulty components are contained in the 'Servicing' section of these Installation & Servicing Instructions.

GENERAL INFORMATION

If a flow switch is not connected to the boiler a link should be fitted between the 2 terminals for the flow switch. If the terminals are left disconnected the display will indicate "No flow" and the boiler will not operate.

Anti-cycle will be in operation each time the boiler thermostat is satisfied and a rapid demand for heat is required. The same situation will occur if the external controls operate rapidly. This feature reduces component wear and ensures continuous troublefree operation. The Anti-cycle duration is 1 - 3 minutes.

If the system pump, with a maximum current of 3A, is connected to the boiler pump terminals, pump overrun will be in operation if the flow temperature is greater than 75 °C, when the heat demand is satisfied, and will continue to run until the boiler flow is less than 75 °C. If the flow temperature is less than 75 °C, when the demand for heat is satisfied, then the pump will cease to operate.

Frost protection is in built with the boiler. If the flow temperature falls to approximately 3 °C then the boiler will operate until the flow temperature exceeds 4 °C. If an external frost thermostat is required the internal programmer should be set to 24 hours under the programme status menu and an external programmer and frost thermostat wired and connected to the volt free external control terminals on the boiler.

There is an option kit available with 2 sets of volt free contacts. One set of volt free contacts is for "Lockout" and "Overheat" combined and one set of volt free contacts is for "Boiler run".

There is an option kit available to enable temperature compensation to be used. The outside temperature adjusts the boiler flow temperature to satisfy the heating load and ensure efficient boiler operation.

The gas valves operate on **High/Low** and **Off** principle. At start up, with the flow temperature less than 55 °C the boiler will start at low rate and after 1-3minutes the high rate gas valve will open. On reaching the set point, determined by the user, the boiler will go to low rate and when the temperature reaches the set point plus 3 °C the low rate gas valve will close. When the temperature falls 2 °C the boiler will start at low rate and remain there until the temperature falls to the set point less 2 °C then the high rate gas valve will operate.
On start up the high rate gas valve will operate immediately after detection if the boiler flow rate is greater than 55 °C.

In order to determine the continued correct operation of the control every 4 hours the boiler will shut down for a maximum of 30 seconds to do a self check operation and restart automatically.

The control will display the number of operational hours of the boiler to the nearest hour and cannot be reset.

The boiler thermostat has a range of 60 °C-80 °C, in 1 °C steps, with an accuracy of ± 2 °C and hysteresis of 3 °C.

The full sequence control enables 5 attempts at ignition, with one minute intervals between attempts, followed by nonvolatile lockout if detection does not take place.

If the [0/1] switch on the front panel is at "Standby.....0" then the pump will continue to run indefinitely. In this state the frost protection can not operate.

In "Lockout" the pump will continue to run only if the temperature is greater than 75 °C. If it is less then the pump will be off.

FAULT FINDING

The boiler control has a unique fault diagnostic feature which can, in the unlikely event of a failure, display a message indicating the nature of the fault to assist a speedy and effective repair.

The faults that are diagnosed are overheat thermostat, pump, boiler sensor, gas valve(s), air pressure switch (if fitted), fan (If fitted), float switch (if fitted), outside sensor (if fitted) with indication of combustion lockout.

In the unlikely event of a fault the display will indicate precisely the fault and give a step by step indication of the method of correcting the fault.

If the HT generator should cease to function its impossible to automatically display this condition. Should this fault occur then:-

DETECTION FAULT

would be displayed and the subsequent display screens would direct attention to the spark generator.

Should a gas valve fail the diagnostics will indicate that it is valve 1 or 2 that is at fault. If the boiler has a gas line of 2 double solenoids the diagnostics will indicate which solenoid of the double solenoid is at fault.

The last fault instruction will be retained.

FAULT CODES

Fault codes numbered 1 to 24 are displayed where applicable. In this event contact **Caradon Plumbing Limited**

52 SIMPLE FLOW CHART OF OPERATION

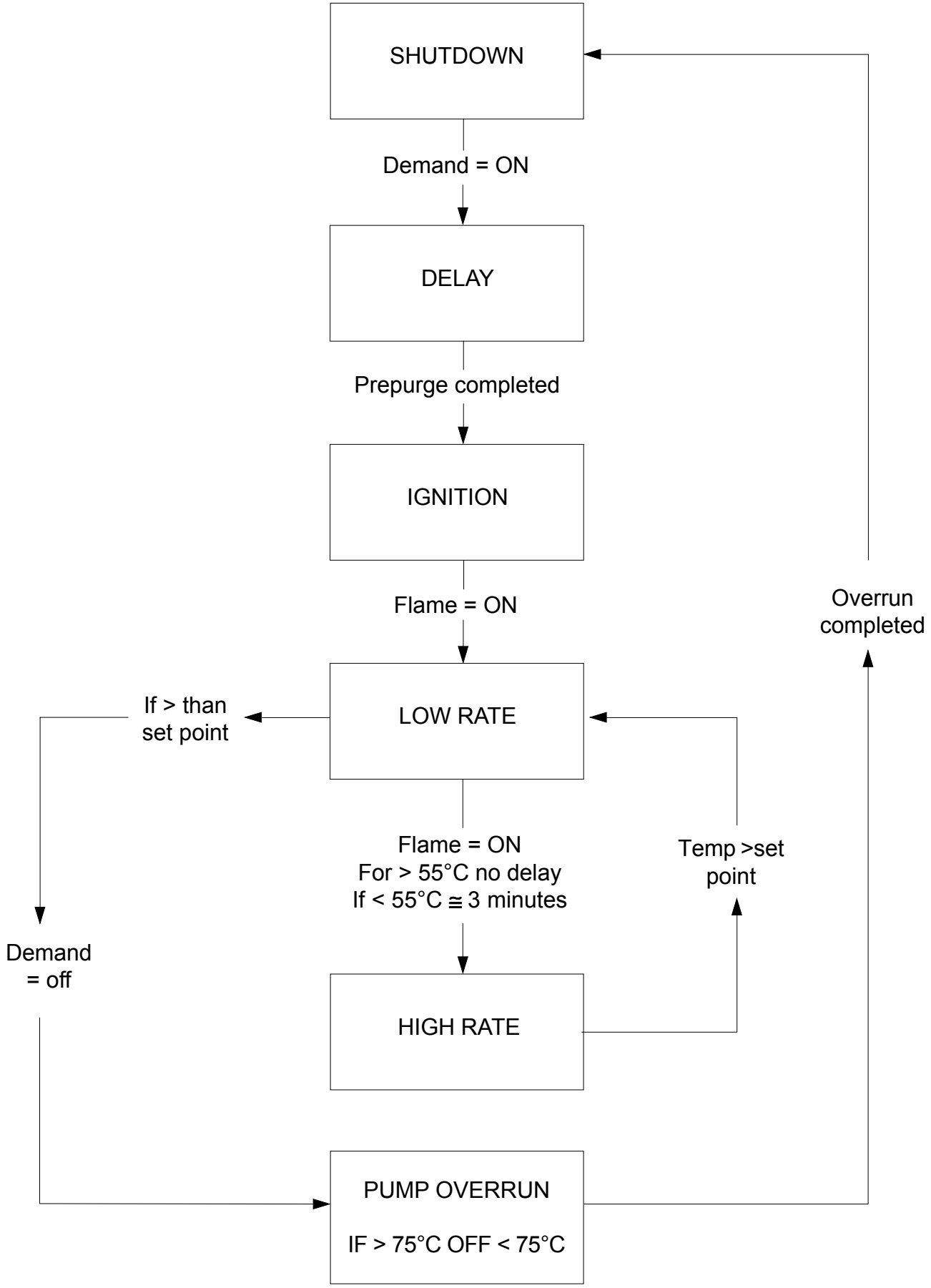

53 FAULT FINDING FLOW CHART

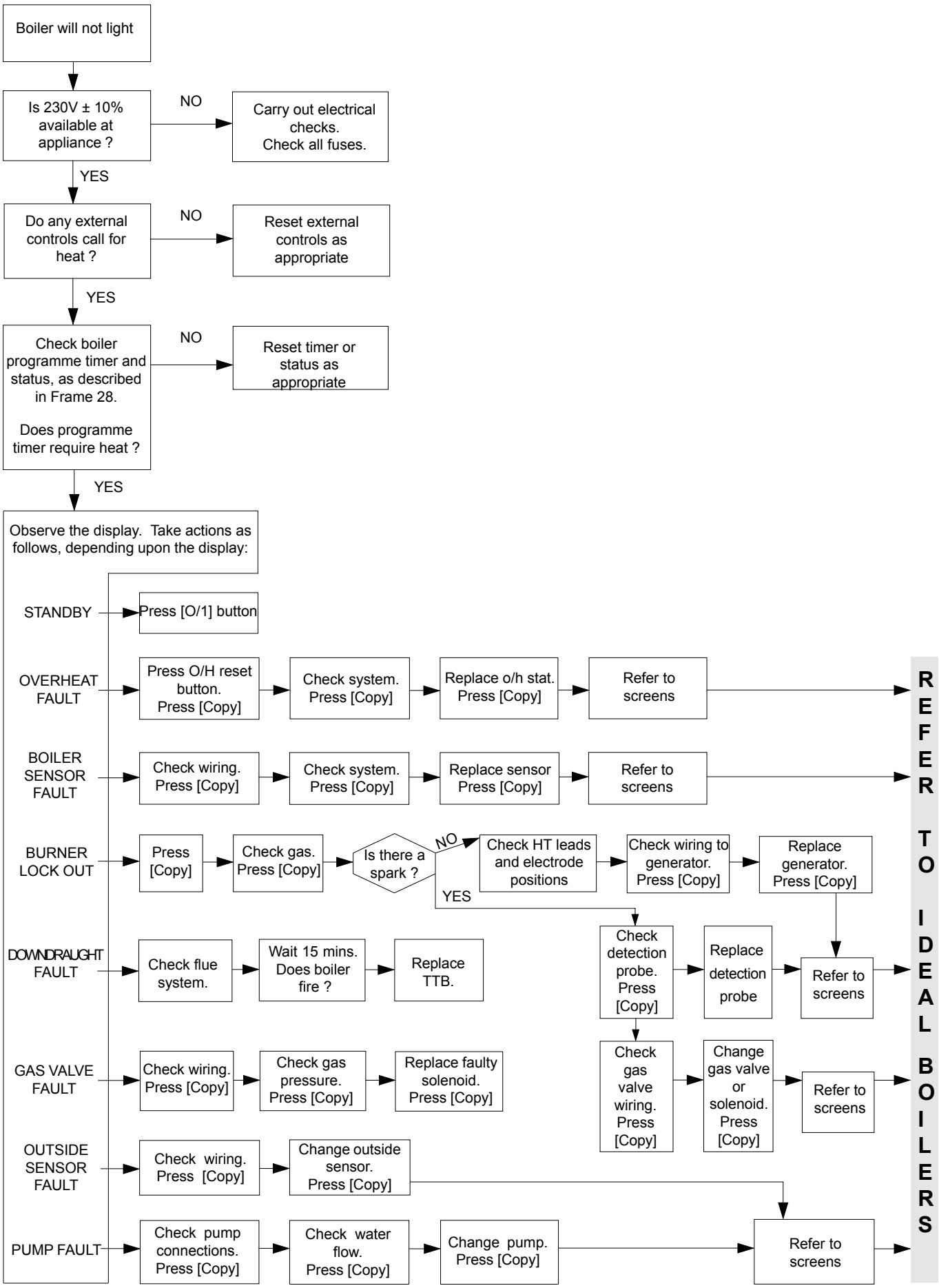

SHORT LIST OF PARTS

The following are parts commonly required as replacements due to damage or expendability. Their failure or absence is likely to affect the safety and/or performance of this appliance.

When ordering spare parts please quote:

1. Boiler model
2. Boiler serial no. (refer to data plate on the combustion chamber)
3. Boiler B.G. P.I. No. (refer to the data plate on the combustion chamber)
4. Description
5. Quantity
6. Product no.

Key No.	Description			Qty.	Product No.
12D	Boiler body insulation	CXD 40		1	150 093
	.....	CXD 50/60		1	150 094
	.....	CXD 70/80		1	150 095
	.....	CXD 90/100		1	150 096
23	Main burner	Worgas 0.087.751	CXD 40	1	150 153
	.....	Worgas 0.087.753	CXD 50 / 60	1	150 154
	.....	Worgas 0.087.755	CXD 70 / 80	1	150 155
	.....	Worgas 0.087.757	CXD 90 /100	1	150 156
24	Main burners	Worgas 0.087.750	CXD 40	2	150 149
	.....	Worgas 0.087.752	CXD 50 / 60	2	150 150
	.....	Worgas 0.087.754	CXD 70 / 80	2	150 151
	.....	Worgas 0.087.756	CXD 90 /100	2	150 152
26	Main burner injectors	Size 3.4 mm;	CXD 40	3	111 323
	.....	Size 3.82mm;	CXD 50	3	111 324
	.....	Size 4.12mm;	CXD 60	3	111 325
	.....	Size 4.57mm;	CXD 70	3	111 326
	.....	Size 4.86mm;	CXD 80	3	013 177
	.....	Size 5.2mm;	CXD 90	3	111 328
	.....	Size 5.3mm;	CXD100	3	013 179
29	Gas control valves				
	HONEYWELL VR4605PB 2003		CXD 40 / 60	1	111 867
	HONEYWELL VR4605A 1104		CXD 70 /100	1	138 896
	HONEYWELL VR4605AB 1019		CXD 70 /100	1	111 869
29H	Gas restrictor		CXD 70 /100	1	150371
30	Spark generator assy (generator and terminals)			1	112 721
32	Ignition electrode BE/3417/SI			1	112 365
33	Detection electrode BE/3459/SI			1	112 364
37	Thermistor			1	112 289
40	Overheat thermostat - RAK 77.4/3835			1	153 914
41	Control box assembly complete			1	138 299
42	PCB 34			1	069 957
43	PCB 35			1	069 960
44	Real time clock			1	069 958
45	PCB 34 and real time clock			1	069 959
46	Ribbon cable			1	069 961

SHORT LIST OF PARTS

Key No.	Description		Qty.	Product No.
29D	Gas valve plug and lead	CXD 40 / 60	1	111 872
29E	.....	CXD 70 /100	1	112 430
29F	.....	CXD 70 /100	1	112 431
29G	.....	CXD 40 /100	1	111 870
48	Right hand jacket side panel - white stove enamel	CXD 40	1	111 650
		CXD 50	1	111 651
		CXD 60	1	111 651
		CXD 70	1	111 652
		CXD 80	1	111 652
		CXD 90 / 100	1	111 653
49	Left hand jacket side panel - white stove enamel	CXD 40	1	111 650
		CXD 50	1	111 651
		CXD 60	1	111 651
		CXD 70	1	111 652
		CXD 80	1	111 652
		CXD 90 / 100	1	111 653
50	Jacket top panel - white stove enamel	CXD 40	1	111 293
		CXD 50	1	111 294
		CXD 60	1	111 295
		CXD 70	1	111 296
		CXD 80	1	111 297
		CXD 90 / 100	1	111 298
51	Jacket lower front panel - white stove enamel complete with lighting instructions.		1	077 107
52	Jacket upper front control panel (less controls) - white stove enamel		1	076 923
53	Jacket assembly, complete - white stove enamel	CXD 40	1	112 312
		CXD 50	1	112 313
		CXD 60	1	112 314
		CXD 70	1	112 315
		CXD 80	1	112 316
		CXD 90 / 100	1	112 317

Technical Training

The Caradon Plumbing Limited Technical Training Centre offers a series of first class training courses for domestic, commercial and industrial heating installers, engineers and system specifiers.

For details of courses please ring: *01270 413624*

Caradon Plumbing Limited pursues a policy of continuing improvement in the design and performance of its products. The right is therefore reserved to vary specification without notice.

January 2000 112 166 A08

CE

Ideal BOILERS

Caradon Plumbing Limited, P.O. Box 103, National Ave, Kingston upon Hull, HU5 4JN. Telephone: 01482 492 251 Fax: 01482 448 858. Registration No. London 322 137. Registered Office: National Avenue, Kingston upon Hull, HU5 4JN. *A subsidiary of Caradon plc*

Ideal Installer/Technical Helpline: 01482 498376

Your feedback
and your chance to win a free boiler

At Ideal we've been leaders in the design and engineering of robust and reliable boilers for over 90 years. We want to continue as leaders by listening to your suggestions for how to improve our boilers and our service. We'll be giving away a free boiler for the five best ideas every year (to be selected by our Technical Director). Please complete this form, using extra sheets if required, and post it or fax it to us on 01482 498699.

Boiler details

Model / Size *(e.g. Classic RS 230, Mexico CF 3/60 etc. Details on control panel door)*

Date of Installation

Installer details

Name

Address

Post Code

Telephone (*Please include STD code*)

How I would improve this boiler:

My general comments for Ideal:

Caradon
Plumbing Solutions

Ideal Installer/Technical Helpline: 01482 498376

Further information

If you would like information about Ideal Boilers please complete this sheet and fax it to us on 01482 498699 or post it to Caradon Plumbing Limited, PO Box 103, National Avenue, Kingston upon Hull, HU5 4JN.

Installer details

Name

Address

Post Code

Telephone (*Please include STD code*)

General information required

- ☐ *Please send me details of Ideal Training Courses.*
- ☐ *Please arrange for a technical representative to contact me.*
- ☐ *Please arrange for me to join an Ideal factory tour.*

Range guides required

- ☐ *The Ideal Guide: a specifier's and installer's introduction to the Ideal domestic boiler range.*
- ☐ *The Ideal Householders Guide: to assist the installer when presenting to his/her customers.*

Technical manuals required

- ☐ *The Ideal C class combi boiler*
- ☐ *The Ideal Classic wall hung boiler*
- ☐ *The Ideal Classic System wall hung boiler*
- ☐ *The Ideal Classic LX Deluxe wall hung boiler*
- ☐ *The Ideal Mexico floor standing boiler*
- ☐ *The Ideal Minimiser heat-saving boiler*
- ☐ *The Ideal Response combi boiler*
- ☐ *The Ideal Response SE super efficiency combi boiler*
- ☐ *The Ideal Systemiser SE super efficiency system boiler*
- ☐ *The Ideal Concord high output boiler*
- ☐ *The Ideal Buccaneer oil fired boiler*

Caradon
Plumbing Solutions

Caradon Plumbing Ltd., PO Box 103, National Avenue, Kingston upon Hull, HU5 4JN. Telephone: 01482 492251 Fax: 01482 448858.

Ideal Installer/Technical Helpline: 01482 498376

U.I.N. 112 166 A0